Телефоны: +7 (495) 120-33-75, 8 (800) 555-39-75 (для регионов бесплатно)
E-mail: info@aspromsystem.ru / Website: https://aspromsystem.ru/

Carrier

Air-Cooled Liquid Chillers with Integrated Hydronic Module

AQUASNAP™
with PURON® refrigerant

Quality Management System Approval

Puron™
the environmentally sound refrigerant

Model shown is with low-noise option

30RB 162-802

Nominal cooling capacity 163-760 kW

The new generation of Aquasnap Puron liquid chillers features the latest technological innovations:
- ozone-friendly refrigerant R-410A
- scroll compressors
- low-noise fans made of a composite material
- auto-adaptive microprocessor control
- aluminium micro-channel heat exchangers (MCHX)

The Aquasnap can be equipped with an integrated hydronic module, limiting the installation to straight-forward operations like connection of the power supply and the chilled water supply and return piping.

Features

Quiet operation

- Compressors
  - Low-noise scroll compressors with low vibration level
  - The compressor assembly is installed on an independent chassis and supported by flexible anti-vibration mountings
  - Dynamic suction and discharge piping support, minimising vibration transmission (Carrier patent)
  - Acoustic compressor enclosure, reducing radiated noise emissions (option)
- Condenser section
  - Condenser coils in V-shape with an open angle, allowing quieter air flow across the coil
  - Low-noise 4th generation Flying Bird fans, made of a composite material (Carrier patent) are now even quieter and do not generate intrusive low-frequency noise
  - Rigid fan installation for reduced noise (Carrier patent)

Easy and fast installation

- Integrated hydronic module (option)
  - Centrifugal low or high-pressure water pump (as required), based on the pressure loss of the hydronic installation
  - Single or dual pump (as required) with operating time balancing and automatic changeover to the back-up pump if a fault develops
  - Water filter protecting the water pump against circulating debris
  - High-capacity membrane expansion tank ensures pressurisation of the water circuit
  - Thermal insulation and frost protection down to -20°C, using an electric resistance heater (see table of options)
  - Pressure gauge to check filter pollution and measure the system water flow rate
  - Water flow control valve

- Simplified electrical connections
  - A single power supply point without neutral (30RB 162-522)
  - Main disconnect switch with high trip capacity (see table of options)
  - 24 V control circuit without risk from a transformer included
- Fast commissioning
  - Systematic factory operation test before shipment
  - Quick-test function for step-by-step verification of the instruments, electrical components and motors

Economical operation

- Increased energy efficiency at part load
  - The refrigerant circuit includes several compressors connected in parallel. At part load, around 99% of the operating time, only the compressors that are absolutely necessary operate. At these conditions the compressors operating are even more energy efficient, as they use the total condenser and evaporator capacity.
  - The electronic expansion device (EXV) allows operation at a lower condensing pressure (EER optimisation).
  - Dynamic superheat management for better utilisation of the evaporator heat exchange surface
  - All-aluminium micro-channel condenser (MCHX), more efficient than a copper/aluminium coil
- Reduced maintenance costs
  - Maintenance-free scroll compressors
  - Fast diagnosis of possible incidents and their history via the Pro-Dialog Plus control
  - R-410A refrigerant is easier to use than other refrigerant blends

Environmental care

- Ozone-friendly R-410A refrigerant
  - Chlorine-free refrigerant of the HFC group with zero ozone depletion potential
  - High-density refrigerant, therefore less refrigerant required
  - Very efficient - gives an increased energy efficiency ratio (EER)
  - 40% reduction in the refrigerant charge through use of the micro-channel heat exchangers (MCHX)
- Leak-tight refrigerant circuit
  - Brazed refrigerant connections for increased leak-tightness
  - Reduction of leaks as no capillary tubes and flare connections are used
  - Verification of pressure transducers and temperature sensors without transferring refrigerant charge

Superior reliability

- State-of-the-art concept
  - Cooperation with specialist laboratories and use of limit simulation tools (finite element calculations) for the design of the critical components, e.g. motor supports, suction/discharge piping
  - Compressor control box installed on the cold side of the compressor (Carrier patent)
  - All-aluminium micro-channel heat exchanger (MCHX) offers 3.5 times higher corrosion resistance than a conventional coil. The all-aluminium construction eliminates the formation of galvanic currents between aluminium and copper that are responsible for the coil corrosion in saline or corrosive atmospheres.
- Auto-adaptive control
  - Control algorithm prevents excessive compressor cycling and permits reduction of the water quantity in the hydronic circuit (Carrier patent).
  - Automatic compressor unloading in case of abnormally high condensing pressure. If an anomaly occurs (e.g. fouled condenser coil, fan failure) Aquasnap continues to operate, but at reduced capacity.
- Exceptional endurance tests
  - Corrosion resistance tests in salt mist in the laboratory
  - Accelerated ageing test on components that are submitted to continuous operation: compressor piping, fan supports
  - Transport simulation test in the laboratory on a vibrating table. The test is based on a military standard and equivalent to 4000 km by truck.

Pro-Dialog Plus control

Pro-Dialog Plus combines intelligence with operating simplicity. The control constantly monitors all machine parameters and precisely manages the operation of compressors, expansion devices, fans and of the evaporator water pump for optimum energy efficiency.

- Energy management
  - Internal time schedule clock: permits chiller on/off control and operation at a second set point
  - Set point reset based on the outside air temperature or the return water temperature
  - Master/slave control of two chillers operating in parallel with operating time equalisation and automatic change-over in case of a unit fault.
  - Start/stop control based on the air temperature
- Ease-of-use
  - User interface with synoptic diagram for intuitive display of the principal operating parameters: number of compressors operating, suction/discharge pressure, compressor operating hours, set point, air temperature, entering/leaving water temperature
  - Ten menus for direct access to all machine commands, including fault history, allowing fast and complete chiller diagnostics

Pro-Dialog Plus operator interface

Remote management (standard)

A simple two-wire communication bus between the RS485 port of the Aquasnap and the Carrier Comfort Network offers multiple remote control, monitoring and diagnostic possibilities. Carrier offers a vast choice of control products, specially designed to control, manage and supervise the operation of an air conditioning system. Please consult your Carrier representative for more information on these products.

- Start/stop: opening of this contact will shut down the unit
- Dual set point: closing of this contact activates a second set point (example: unoccupied mode)
- Demand limit: closing of this contact limits the maximum chiller capacity to a predefined value
- User safety: this contact is connected in series with the water flow switch and can be used for any customer safety loop
- Heat reclaim (option): closing of this contact allows heat reclaim mode operation
- Water pump 1 and 2 control*: these outputs control the contactors of one or two evaporator water pumps
- Water pump on reversal*: these contacts are used to detect a water pump operation fault and automatically change over to the other pump
- Operation indication: this volt-free contact indicates that the chiller is operating (cooling load) or that it is ready to operate (no cooling load)
- Alert indication: this volt-free contact indicates the presence of a minor fault
- Alarm indication: this volt-free contact indicates the presence of a major fault that has led to the shut-down of one or two refrigerant circuits

* contacts already supplied with the hydronic module option

Remote management (EMM option)

- Room temperature: permits set point reset based on the building indoor air temperature (with Carrier thermostat)
- Set point reset: ensures reset of the cooling set point based on a 4-20 mA or 0-5 V signal
- Demand limit: permits limitation of the maximum chiller demand based on a 4-20 mA or 0-5 V signal
- Demand limit 1 and 2: closing of these contacts limits the maximum chiller capacity to three predefined values
- User safety: this contact can be used for any customer safety loop, closing of the contact generates a specific alarm
- Ice storage end: when ice storage has finished, this input permits return to the second set point (unoccupied mode)
- Time schedule override: closing of this contact cancels the time schedule effects
- Out of service: this signal indicates that the chiller is completely out of service
- Chiller capacity: this analogue output (0-10 V) gives an immediate indication of the chiller capacity
- Compressor operation: this contact signals that one or several compressors are in operation

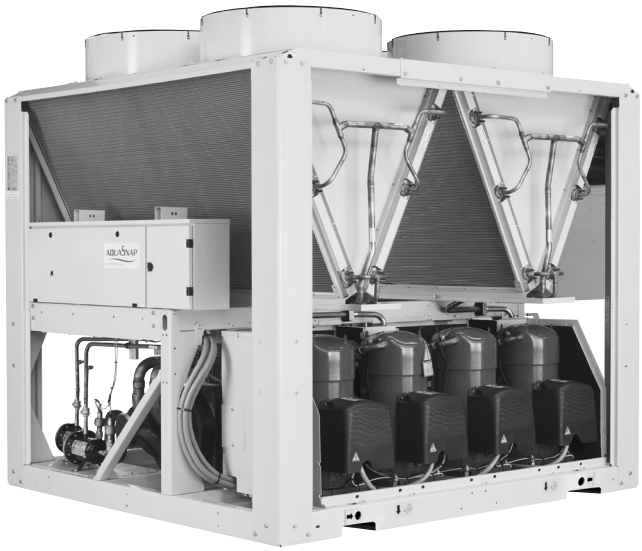

All aluminium micro-channel heat exchanger (MCHX)

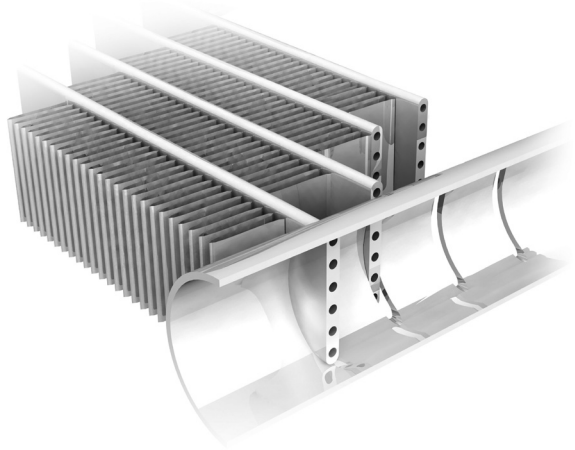

Already utilised in the automobile and aeronautical industries for many years, the MCHX heat exchanger is entirely made of aluminium. This one-piece concept significantly increases its corrosion resistance by eliminating the galvanic currents that are created when two different metals (copper and aluminium) come into contact in traditional heat exchangers. Unlike traditional heat exchangers the MCHX heat exchanger can be used in moderate marine and urban environments.

From an energy efficiency point-of-view the MCHX heat exchanger is approximately 10% more efficient than a traditional coil and allows a 40% reduction in the amount of refrigerant used in the chiller. The low thickness of the MCHX reduces air pressure losses by 50% and makes it less susceptible to fouling (e.g. by sand) than a traditional coil. Cleaning of the MCHX heat exchanger is very fast using a high-pressure washer.

Part load performances

With the rapid increase in energy costs and the care about environmental impacts of electricity production, the power consumption of air conditioning equipment has become an important topic. The energy efficiency of a liquid chiller at full load is rarely representative of the actual performance of the units, as on average a chiller works less than 5% of the time at full load.

The heat load of a building depends on many factors, such as the outside air temperature, the exposure to the sun and its occupation.

Consequently it is preferable to use the seasonal energy efficiency, calculated at several operating points that are representative for the unit utilisation.

ESEER (EUROVENT)

The ESEER (European seasonal energy efficiency ratio) permits evaluation of the average energy efficiency at part load, based on four operating conditions defined by Eurovent. The ESEER is the average value of energy efficiency ratios (EER) at different operating conditions, weighted by the operating time.

ESEER (European seasonal energy efficiency ratio)

Load, %	Air temperature, °C	Energy efficiency	Operating time, %
100	35	EER1	3
75	30	EER2	33
50	25	EER3	41
25	20	EER4	23

$ESEER = EER_1 \times 3\% + EER_2 \times 33\% + EER_3 \times 41\% + EER_4 \times 23\%$

Note: Constant leaving water temperature = 7°C

Part load performances in accordance with Eurovent

30RB 162-262 "B" standard units (with plate heat exchanger)

30RB	Load %	CAP kW	Unit kW	EER kW/kW	ESEER kW/kW
162	100	163	54.6	2.99	
	75	122	35.0	3.49	
	50	81.5	20.5	3.97	
	25	40.7	9.60	4.25	3.85
182	100	180	59.9	3.00	
	75	135	39.2	3.44	
	50	89.8	23.7	3.79	
	25	44.9	11.4	3.95	3.69
202	100	205	70.5	2.91	
	75	154	40.7	3.77	
	50	102	24.9	4.11	
	25	51.2	12.1	4.23	3.99
232	100	222	72.5	3.06	
	75	167	45.9	3.63	
	50	111	26.4	4.21	
	25	55.5	12.1	4.60	4.07
262	100	259	95.4	2.71	
	75	194	58.0	3.34	
	50	129	31.7	4.07	
	25	64.6	14.7	4.40	3.87

Load % - Unit heat load
Cap kW - Cooling capacity
Unit kW - Unit power input
EER - Cooling capacity kW/unit power input kW

Part load performances in accordance with Eurovent

30RB 162-262 "B" units with option 280 (shell-and-tube heat exchanger) and 30RB 302-802 units

30RB	Load %	Cap kW	Unit kW	EER kW/kW	ESEER kW/kW
162	100	159	53.8	2.95	
	75	119	35.9	3.31	
	50	79.3	21.0	3.77	
	25	39.6	9.7	4.10	3.67
182	100	173	59.3	2.92	
	75	130	37.6	3.45	
	50	86.6	21.6	4.00	
	25	43.3	9.8	4.41	3.88
202	100	193	70.1	2.75	
	75	145	42.2	3.42	
	50	96.4	24.6	3.92	
	25	48.2	11.5	4.18	3.78
232	100	227	72.8	3.12	
	75	171	45.4	3.76	
	50	114	25.5	4.45	
	25	56.8	11.7	4.87	4.28
262	100	263	97.5	2.70	
	75	198	59.8	3.31	
	50	132	32.6	4.04	
	25	65.8	15.0	4.40	3.84
302	100	293.3	104.5	2.81	
	75	220	62.3	3.53	
	50	147	36.1	4.06	
	25	73	16.2	4.54	3.96
342	100	327.5	120.9	2.71	
	75	245.6	71.50	3.44	
	50	164	40.0	4.09	
	25	82	18.1	4.53	3.94
372	100	358.5	127.5	2.81	
	75	268.9	73.7	3.65	
	50	179	42.4	4.22	
	25	90	19.4	4.62	4.08
402	100	391	146.6	2.67	
	75	293.2	83.9	3.50	
	50	196	48.3	4.05	
	25	98	21.7	4.50	3.93
432	100	418	150.6	2.77	
	75	313.2	86.7	3.61	
	50	209	51.4	4.06	
	25	104	24.6	4.24	3.92
462	100	447	168.5	2.65	
	75	335.1	93.3	3.59	
	50	223.4	55.5	4.03	
	25	111.7	27.2	4.11	3.86
522	100	506.3	191.4	2.65	
	75	379.7	109.5	3.47	
	50	253.1	63.7	3.97	
	25	126.6	31.6	4.01	3.77
602	100	596.2	218.1	2.73	
	75	447.1	121.9	3.67	
	50	298.1	70.8	4.21	
	25	149	31.9	4.66	4.09
672	100	651.8	240.6	2.71	
	75	488.8	137	3.57	
	50	325.9	78.8	4.14	
	25	163	36.1	4.52	4.00
732	100	704.2	265.1	2.66	
	75	528.2	148.2	3.56	
	50	352.1	84.3	4.15	
	25	176.1	40.6	4.33	3.96
802	100	757.7	288.1	2.63	
	75	568.3	162.6	3.5	
	50	378.8	92.4	4.1	
	25	189.4	43.9	4.31	3.91

Load % - Unit heat load
Cap kW - Cooling capacity
Unit kW - Unit power input
EER - Cooling capacity kW/unit power input kW

Options and accessories

Options	No.	Description	Advantages	Use
Condenser with anti-corrosion post-treatment	2B	Coils with copper tubes and aluminium fins with Blygold Polual treatment	Improved corrosion resistance, recommended for marine, industrial and rural environments	30RB 162-802
Corrosion protection, traditional coils	3A	Pre-treated aluminium fins (polyurethane and epoxy)	Improved corrosion resistance, recommended for marine, moderate or urban environments	30RB 162-802
Unit for low leaving water temperature	6	Leaving water temperature of +3°C to -10°C.	All low-temperature applications: ice storage, cold stores, process cooling etc.	30RB 162-402
Unit for indoor installation with discharge ducts	12	Fans with available pressure	Ducted condenser air discharge, optimised condensing temperature control, based on the operating conditions and system characteristics	30RB 162-802
Low noise level	15	Sound absorbing compressor enclosure	Noise emission reduction	30RB 162-802
Very low noise level	15LS	Sound absorbing compressor enclosure and low-speed fans	Noise emission reduction	30RB 162-802
Grilles	23	Metallic grilles on all four unit faces (this option includes the supply of enclosure panels)	Improved aesthetics	30RB 162-802
Enclosure panels (for units with copper/aluminium coils only)	23A	Side panels on each end of the coils	Improved aesthetics	30RB 162-802
Electronic starter	25	Electronic starter on each compressor	Reduced start-up current	30RB 162-522
Winter operation down to -20°C	28	Fan speed control via frequency converter	Stable unit operation when the air temperature is between 0°C and -20°C	30RB 162-802
Winter operation down to -10°C	28B	Twin-speed lead fan for each circuit	Stable unit operation when the air temperature is between 0°C and -10°C	30RB 162-802
Evaporator and water piping frost protection	41	Electric heater on the evaporator and the water inlet/outlet piping	Evaporator frost protection down to -20°C outside temperature	30RB 162-802
Evaporator, water piping and hydronic module frost protection	42A	Electric heaters on the evaporator, the water inlet/outlet piping and hydronic module	Evaporator and hydronic module frost protection down to -20°C outside temperature	30RB 162-522
Partial heat reclaim	49	Partial heat reclaim by desuperheating of the compressor discharge gas	Free high-temperature hot-water production simultaneously with chilled water production	30RB 162-802
Total heat reclaim	50	See heat reclaim option. Note: Unit equipped with coils with copper tubes and aluminium fins	Free hot water production simultaneously with chilled water production	30RB 262-522
Twinning	58	Unit equipped with an additional field-installed leaving water temperature sensor, allowing master/slave operation of two chillers connected in parallel	Optimised operation of two chillers connected in parallel with operating time equalisation	30RB 162-802
Main disconnect switch without fuse (standard for sizes 162-262)	70	Factory-installed main electric disconnect switch in the control box	Ease-of-installation and compliance with local electrical regulations	30RB 302-802
Main disconnect switch with fuse	70D	Factory-installed main electric disconnect switch with fuse in the control box	Same advantage as main disconnect switch and reinforced anti-short circuit protection	30RB 302-802
Evaporator with aluminium jacket	88	Evaporator thermal insulation protection by aluminium sheets	Improved resistance to climatic aggression	30RB 162-802
Evaporator and hydronic module with aluminium jacket	88A	Evaporator and water piping thermal insulation protection by aluminium sheets	Improved resistance to climatic aggression	30RB 302-522
Suction valve	92	Shut-off valve on the compressor suction piping (discharge valve as standard)	Simplified maintenance	30RB 302-802
Compressor suction and discharge valves	92A	Shut-off valves on the common compressor suction and discharge piping	Simplified maintenance	30RB 162-262
High-pressure single-pump hydronic module	116B	See hydronic module option	Easy and fast installation	30RB 162-522
High-pressure dual-pump hydronic module	116C	See hydronic module option	Easy and fast installation, operating safety	30RB 162-522
Low-pressure single-pump hydronic module	116F	See hydronic module option	Easy and fast installation	30RB 162-522
Low-pressure dual-pump hydronic module	116G	See hydronic module option	Easy and fast installation, operating safety	30RB 162-522
Direct-expansion free-cooling system	118A	See free-cooling option. Note: Unit equipped with coils with copper tubes and aluminium fins	Economic chilled-water production at low outside temperature	30RB 232-522
JBus gateway	148B	Two-directional communications board, complies with JBus protocol	Easy connection by communication bus to a building management system	30RB 162-802
Bacnet gateway	148C	Two-directional communications board, complies with Bacnet protocol	Easy connection by communication bus to a building management system	30RB 162-802
LonTalk gateway	148D	Two-directional communications board, complies with LonTalk protocol	Easy connection by communication bus to a building management system	30RB 162-802
Energy Management Module EMM	156	See controls manual	Easy wired connection to a building management system	30RB 162-802
Safety valve with three-way valve fitted	194	Three-way valve upstream of the safety valves (not compatible with BPHE version)	Safety valve inspection and replacement facilitated without refrigerant loss	30RB 162-802
Russian code compliance	199	GOST certification	Conformance with Russian regulations (GOST)	30RB 162-802
Conformance with Australian regulations	200	Heat exchanger approved to Australian code	-	30RB 162-802
Storage unit above 48°C	241	Refrigerant charge stored in the condenser. Option not compatible with MCHX coils; Cu/Al coils are required to store the charge	Unit transport by container only possible with this option	30RB 162-802
MCHX anti-corrosion protection	263	MCHX protection by the Carrier factory for applications in aggressive environments	The Super Enviro-Shield option was developed to increase the application range of MCHX coils to severe environmental conditions: this option is compulsory for industrial and coastal environments.	30RB 162-802
Shell-and- tube evaporator	280	Different heat exchanger type	Ensures compatibility with other options than those available with the standard unit (see Electronic Catalogue)	30RB 162-262
Accessories		**Description**	**Advantages**	**Use**
Connection sleeve		Piping to be welded with Victaulic connection	Ease-of-installation	30RB 162-802
Energy Management Module EMM		See controls manual	Easy connection by wired connection to a building management system	30RB 162-802
Scrolling Marquee Interface		Remotely installed user interface (communication bus)	Remote chiller control up to 300 m	30RB 162-802
Power cable connection side extension		Side extension on the power control to allow a reduced cable bend radius	Use of thicker power cables	30RB 302-802
Connection sleeve, standard unit		Water inlet/outlet extension for connection with a Victaulic collar on the water inlet/outlet piping	Facilitates connection	30RB 162-262

Physical data

30RB 162-262 “B” standard units (with plate heat exchanger)

30RB		162	182	202	232	262
Nominal cooling capacity*	kW	163	180	205	222	259
Nominal power input, standard unit*†	kW	55	60	70	72	95
EER	kW/kW	2.99	3.00	2.91	2.99	2.71
Eurovent class, cooling		B	B	B	B	C
ESEER	kW/kW	3.85	3.69	3.99	4.07	3.87
Operating weight**						
Standard unit with option 15 and high-pressure dual-pump hydronic module option	kg	1615	1693	1792	1859	2042
Unit with option 15	kg	1402	1480	1579	1638	1821
Standard unit	kg	1296	1374	1473	1492	1675
Sound levels						
Unit with option 15LS (very low noise level)						
Sound power level 10^{-12} W***†	dB(A)	84	84	84	85	85
Sound pressure level at 10 m****	dB(A)	52	52	52	53	53
Unit with option 15 (low noise level)						
Sound power level 10^{-12} W***†	dB(A)	89	89	89	89	89
Sound pressure level at 10 m****	dB(A)	57	57	57	57	57
Standard unit‡						
Sound power level 10^{-12} W***†	dB(A)	91	91	91	91	91
Sound pressure level at 10 m****	dB(A)	59	59	59	59	59
Compressors		Hermetic scroll, 48.3 r/s				
Circuit A		1	1	1	2	2
Circuit B		2	2	2	2	2
Circuit C		-	-	-	-	-
No. of control stages		-	-	-	-	4
Refrigerant		R-410A				
Circuit A	kg	8.8	11.5	11.5	14.6	14.6
Circuit B	kg	13.2	13.2	13.2	14.1	14.1
Circuit C	kg	-	-	-	-	-
Caoacity control		Pro-Dialog Plus				
Minimum capacity	%	33	28	33	25	25
Condensers		All aluminium micro-channel heat exchanger (MCHX)				
Fans		Axial Flying Bird 4 with rotating shroud				
Quantity		3	4	4	4	4
Total air flow (high speed)	l/s	13542	18056	18056	18056	18056
Speed	r/s	16	16	16	16	16
Evaporator		Twin-circuit plate heat exchanger				
Water volume	l	10.76	10.76	12.64	16.38	16.69
Max. water-side operating pressure without hydronic module	kPa	1000	1000	1000	1000	1000
Water connections without hydronic module		Victaulic				
Diameter	inch	2-1/2	2-1/2	2-1/2	2-1/2	2-1/2
Outside tube diameter	mm	88.9	88.9	88.9	88.9	88.9
Chassis paint colour		Colour code: RAL7035				

* Nominal conditions: evaporator entering/leaving water temperature 12°C/7°C, outside air temperature 35°C, evaporator fouling factor 0.18 x 10^{-4} (m^2 K)/W
** Weight shown is a guideline only. To find out the unit refrigerant charge, please refer to the unit nameplate.
*** In accordance with ISO 9614-1 and certified by Eurovent.
**** Average sound pressure level, unit in a free field on a reflective surface
† Data is not contractually binding and for information only. The values are rounded.
‡ Standard unit: base unit without option 15 and hydronic module.

30RB 162-262 “B” units with option 280 (shell-and-tube heat exchanger) and 30RB 302-802 units

30RB		162	182	202	232	262	302	342	372	402	432	462	522	602	672	732	802
Nominal cooling capacity*	kW	159	173	193	227	263	293	328	359	391	418	447	506	596	652	704	758
Nominal power input, standard unit*†	kW	54	59	70	73	98	104	121	128	147	151	169	191	218	240	265	288
EER	kW/kW	2.94	2.93	2.76	3.11	2.68	2.82	2.71	2.80	2.66	2.77	2.64	2.65	2.73	2.72	2.66	2.63
Eurovent class, cooling		B	B	C	A	D	C	C	C	D	C	D	D	C	C	D	D
ESEER	kW/kW	3.67	3.88	3.78	4.28	3.84	3.96	3.94	4.08	3.93	3.92	3.86	3.77	4.09	4.00	3.96	3.91
Operating weight**																	
Standard unit with option 15 and high-pressure dual-pump hydronic module option	kg	1960	2040	2130	2160	2330	3070	3266	3254	3480	4010	4200	4400	-	-	-	-
Unit with option 15	kg	1780	1860	1950	1970	2150	2770	2966	3014	3140	3670	3810	3988	5166	5344	6024	6204
Standard unit	kg	1710	1780	1880	1890	2060	2660	2856	2884	3010	3520	3660	3818	4966	5135	5794	5954
Sound levels																	
Unit with option 15LS (very low noise level)																	
Sound power level 10^{-12} W***†	dB(A)	84	84	84	85	85	86	86	87	87	88	88	88	89	89	89	90
Sound pressure level at 10 m****	dB(A)	52	52	52	53	53	54	54	55	55	55	55	56	56	57	57	57
Unit with option 15 (low noise level)																	
Sound power level 10^{-12} W***†	dB(A)	89	89	89	89	89	90	90	91	91	92	92	92	93	93	94	94
Sound pressure level at 10 m****	dB(A)	57	57	57	57	57	58	58	59	59	60	60	60	61	61	61	62
Standard unit‡																	
Sound power level 10^{-12} W***†	dB(A)	91	91	91	91	91	92	92	93	93	94	94	94	95	95	96	96
Sound pressure level at 10 m****	dB(A)	59	59	59	59	59	60	60	61	61	62	62	62	62	63	63	64
Compressors		Hermetic scroll, 48.3 r/s															
Circuit A		1	1	1	2	2	3	3	3	3	4	4	4	3	3	4	4
Circuit B		2	2	2	2	2	2	2	3	3	3	3	4	3	3	4	4
Circuit C		-	-	-	-	-	-	-	-	-	-	-	-	3	4	3	4
No. of control stages		-	-	-	-	4	5	5	6	6	7	7	8	9	10	11	12
Refrigerant		R-410A															
Circuit A	kg	11.4	11.4	11.4	14.5	14.5	20	21	21	20.5	26	26.5	26.5	23	23	28	28
Circuit B	kg	13.5	13.5	13.5	14	14	14	14	21	21.5	22	21.5	27.5	23	22.5	30	30
Circuit C	kg	-	-	-	-	-	-	-	-	-	-	-	-	24	28	25	33
Capacity control		Pro-Dialog Plus															
Minimum capacity	%	33	28	33	25	25	18	20	15	17	13	14	13	11	10	9	8
Condensers		All aluminium micro-channel heat exchanger (MCHX)															
Fans		Axial Flying Bird 4 with rotating shroud															
Quantity		3	4	4	4	4	5	5	6	6	7	7	8	9	10	11	12
Total air flow (high speed)	l/s	13542	18056	18056	18056	18056	22569	22569	27083	27083	31597	31597	36111	40623	45139	49653	54167
Speed	r/s	16	16	16	16	16	16	16	16	16	16	16	16	16	16	16	16
Evaporator		Direct expansion. shell-and-tube															
Water volume	l	120	120	120	110	110	110	125	125	125	113	113	113	284	284	284	284
Max. water-side operating pressure without hydronic module	kPa	1000	1000	1000	1000	1000	1000	1000	1000	1000	1000	1000	1000	1000	1000	1000	1000
Water connections without hydronic module		Victaulic															
Diameter	inch	3	3	3	3	3	4	4	4	4	6	6	6	6	6	6	6
Outside tube diameter	mm	88.9	88.9	88.9	88.9	88.9	114.3	114.3	114.3	114.3	168.3	168.3	168.3	168.3	168.3	168.3	168.3
Chassis paint colour		Colour code: RAL7035															

* Nominal conditions: evaporator entering/leaving water temperature 12°C/7°C, outside air temperature 35°C, evaporator fouling factor 0.18 x 10^{-4} (m^2 K)/W
** Weight shown is a guideline only. To find out the unit refrigerant charge, please refer to the unit nameplate.
*** In accordance with ISO 9614-1 and certified by Eurovent.
**** Average sound pressure level, unit in a free field on a reflective surface
† Data is not contractually binding and for information only. The values are rounded.
‡ Standard unit: base unit without option 15 and hydronic module.

Electrical data

30RB 162-262 “B” standard units (plate heat exchanger) and units with option 280 (shell-and-tube heat exchanger) and 30RB 302-802 units

30RB (without hydronic module)		162	182	202	232	262	302	342	372	402	432	462	522	602	672	732	802
Power circuit																	
Nominal power supply	V-ph-Hz	400-3-50															
Voltage range	V	360-440															
Max. connectable power cable section																	
Circuit A + B	mm²	1x240	1x240	1x240	1x240	1x240	2x240	2x240	2x240	2x240	3x240	3x240	3x240	2x240	2x240	3x240	3x240
or		2x150	2x150	2x150	2x150	2x150											
Circuit C	mm²	-	-	-	-	-	-	-	-	-	-	-	-	2x185	2x185	2x185	2x185
Control circuit supply		24 V, via internal transformer															
Maximum unit power input*																	
Circuits A + B	kW	76	85	98	102	127	140	159	172	191	204	223	255	191	191	255	255
Circuit C	kW	-	-	-	-	-	-	-	-	-	-	-	-	96	127	96	127
Nominal unit current draw**																	
Circuits A + B	A	101	113	129	135	167	185	209	227	251	269	293	334	251	251	334	334
Circuit C	A	-	-	-	-	-	-	-	-	-	-	-	-	125	167	125	167
Maximum unit current draw***																	
Circuits A + B	A	131	146	168	175	219	241	274	296	329	351	384	438	329	329	439	438
Circuit C	A	-	-	-	-	-	-	-	-	-	-	-	-	164	219	164	219
Maximum start-up current, standard unit (Un)†																	
Circuits A + B	A	304	353	375	348	426	448	481	502	535	557	590	645	535	535	645	645
Circuit C	A	-	-	-	-	-	-	-	-	-	-	-	-	371	426	371	426
Cosine phi, unit at max. capacity		0.84	0.84	0.84	0.84	0.84	0.84	0.84	0.84	0.84	0.84	0.84	0.84	0.84	0.84	0.84	0.84
Max. start-up current, unit with soft starter (Un)†																	
Circuits A + B†	A	259	283	305	277	356	378	411	433	466	489	521	575	-	-	-	-
Circuit C	A	-	-	-	-	-	-	-	-	-	-	-	-	-	-	-	-
Stability for three-phase short circuits (TN system)																	
Units with main disconnect without fuse††																	
Short-time current (1 s) rms/peak value																	
Circuits A + B	kA/kA	9/26	9/26	9/26	9/26	9/26	13/26	13/26	13/26	13/26	15/30	15/30	15/30	13/26	13/26	15/30	15/30
Circuit C	kA/kA	-	-	-	-	-	-	-	-	-	-	-	-	13/26	13/26	13/26	13/26
Unit with main disconnect with fuse‡																	
Circuits A + B	kA	NA	NA	NA	NA	NA	50	50	50	50	50	50	50	50	50	50	50
Circuit C	kA	-	-	-	-	-	-	-	-	-	-	-	-	50	50	50	50

* Power input of the compressor(s) + fan(s) at maximum unit operating conditions. Values given on the unit name plate.
** Nominal unit current draw at nominal conditions: evaporator entering/leaving water temperature 12°C/7°C, outdoor air temperature 35°C. The current values are given at 400 V nominal voltage.
*** Maximum unit operating current at maximum unit power input and 400 V.
† Maximum instantaneous starting current at 400 V nominal voltage and operating limit values with compressor in across-the-line start (maximum operating current of the smallest compressor(s) + fan current + locked rotor current of the largest compressor).
†† Standard for 30RB 162 to 262 and option for 30RB 302 to 802
‡ Not available for 30RB 162 to 262 and option for 30RB 302 to 802

Note: Units 30RB 602-802 have two electrical connection points.

Operating limits

Evaporator water flow rate

30RB 162-262 “B” standard units (with plate heat exchanger)

30RB	Minimum flow rate, l/s	Maximum flow rate, l/s*
162	2.8	13.9
182	2.8	13.9
202	2.8	14.3
232	3.0	14.3
262	3.5	14.3

30RB 162-262 “B” with option 280 (shell-and-tube heat exchanger) and 30RB 302-802

30RB	Minimum flow rate, l/s	Maximum flow rate, l/s*
162	2.8	28.1
182	2.8	28.1
202	2.8	28.1
232	3.0	26.7
262	3.5	26.7
302	3.9	26.7
342	4.4	29.4
372	4.9	29.4
402	5.2	29.4
432	5.8	31.1
462	6.1	31.1
522	6.9	31.1
602	7.9	50.6
672	8.7	50.6
732	9.6	50.6
802	10.3	50.6

* The maximum flow rate corresponds to a pressure loss of 100 kPa (heat exchanger without hydronic module).

Evaporator water temperature, °C	Minimum	Maximum
Entering water temperature at shut-down	-	48
Entering water temperature at start-up	6.8	40
Entering water temperature during operation	6.8	25
Leaving water temperature during operation (plate heat exchanger)	5	15
Leaving water temperature during operation (shell-and-tube heat exchanger)	3.3	15

Condenser air temperature, °C	Minimum	Maximum
Standard unit	0	48
With winter operation option (No. 28)	-20	48
With winter operation option (No. 28B)	-10	48

Operating range - 30RB 162-262 “B” standard units (with plate heat exchanger)

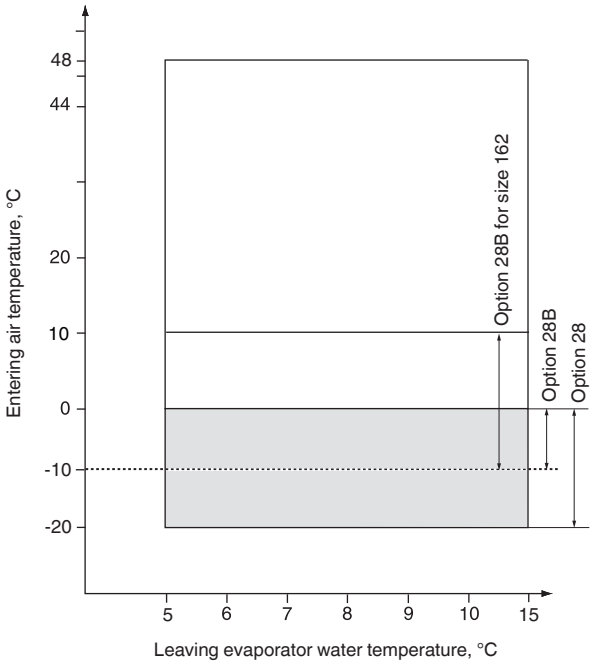

Operating range - 30RB 162-262 “B” with option 280 (shell-and-tube heat exchanger) and 30RB 302-802

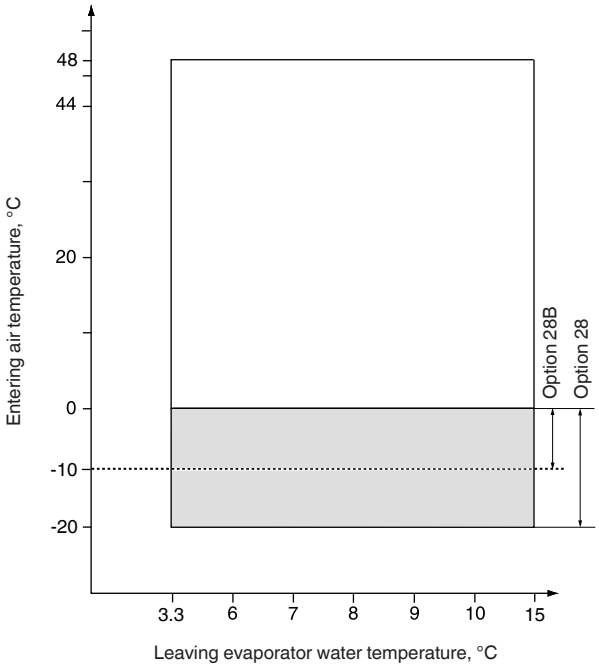

Notes:
Evaporator ΔT = 5 K
The evaporator is protected against frost down to -20°C.

Legend:

Standard unit operating at full load.
Operating range, units equipped with options 28 and 28B “Winter operation”.
Option 28 (with variable-speed lead fan for each circuit) allows operation down to -20°C outside temperature.
Option 28B (with two-speed lead fan for each circuit) allows operation down to -10°C outside temperature.
Moreover the unit must either be equipped with the evaporator frost protection option or the water loop must be protected against frost by the installer, using an anti-freeze solution.

Dimensions/clearances

30RB 162-262 “B”, standard units (with plate heat exchanger)

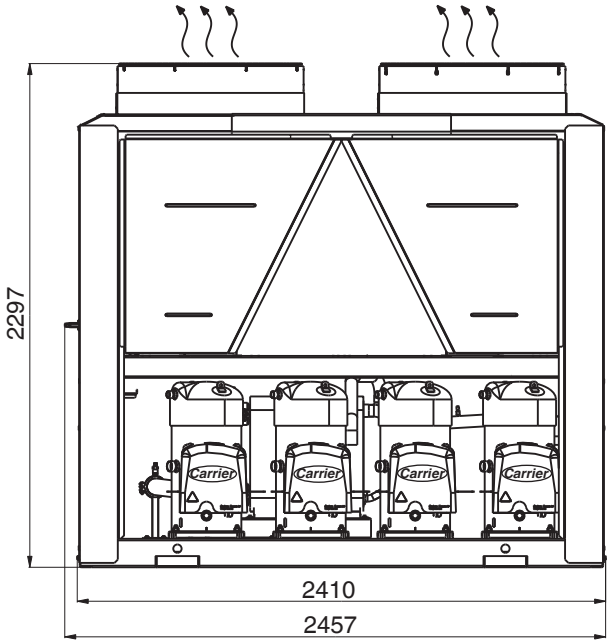

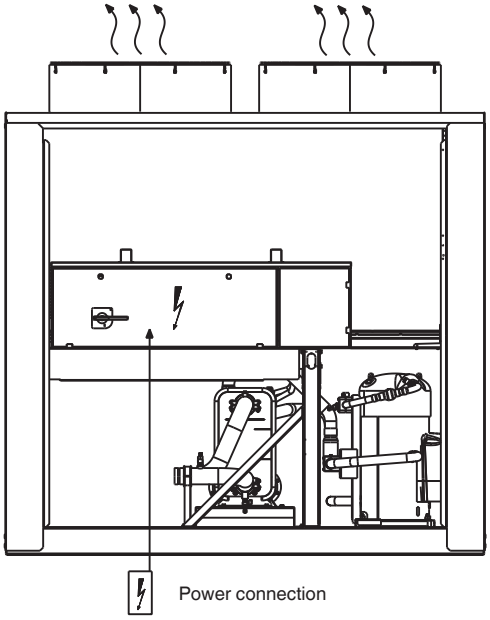

Unit with hydronic module

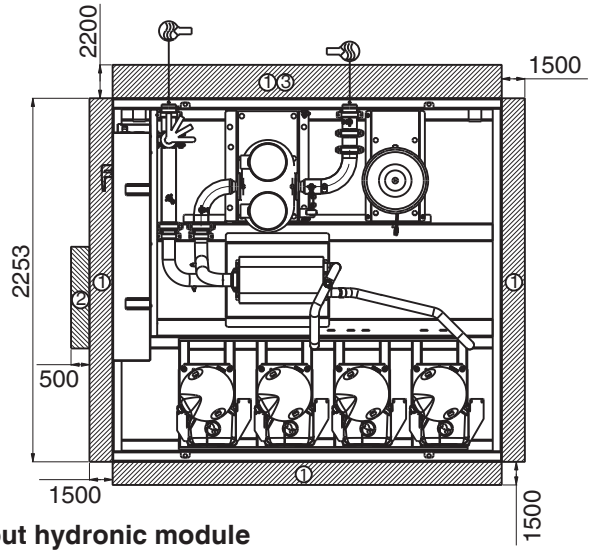

Unit without hydronic module

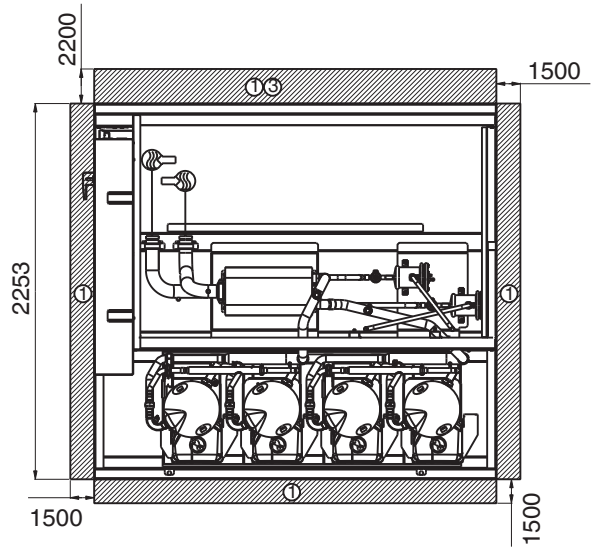

Legend:
All dimensions are in mm.

1. Clearances required for maintenance and air flow
2. Clearances recommended for evaporator tube removal
3. Clearances recommended for heat exchanger removal

Water inlet

Water outlet

Air outlet, do not obstruct

NOTE: Drawings are not contractually binding. Before designing an installation, consult the certified dimensional drawings, available on request.

For the positioning of the fixing points, weight distribution points and centre of gravity coordinates please refer to the dimensional drawings.

Dimensions/clearances

30RB 162-262 “B” with option 280 (shell-and-tube heat exchanger)

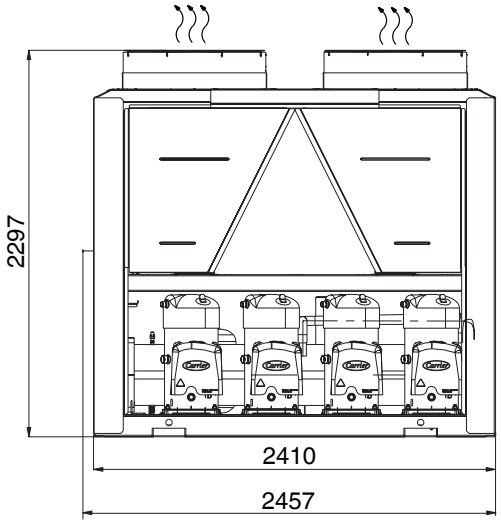

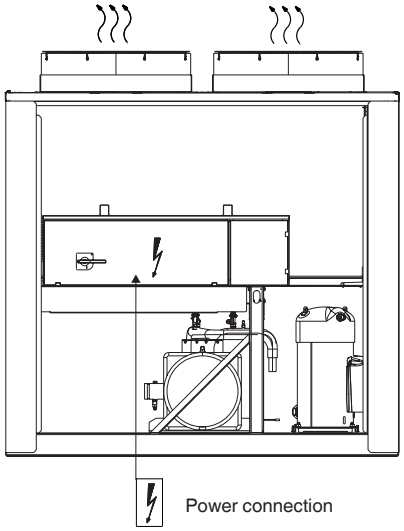

Unit with hydronic module

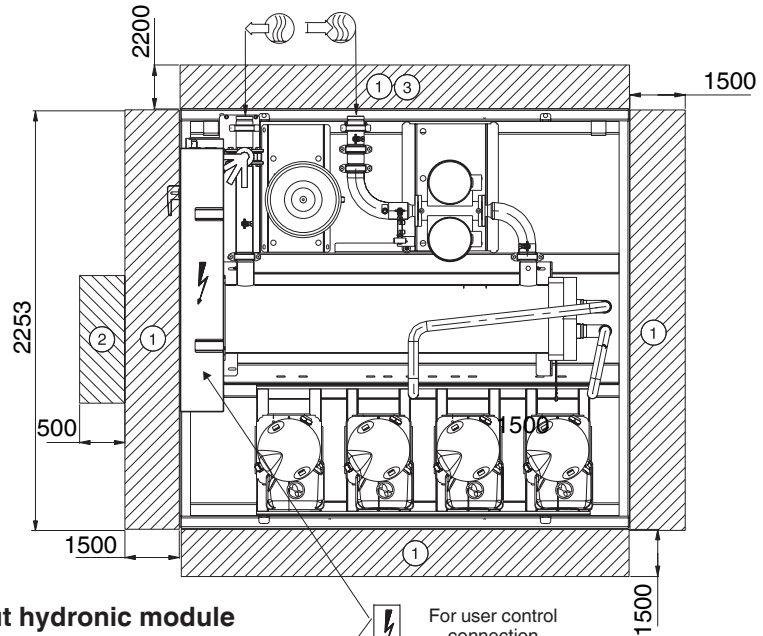

Unit without hydronic module

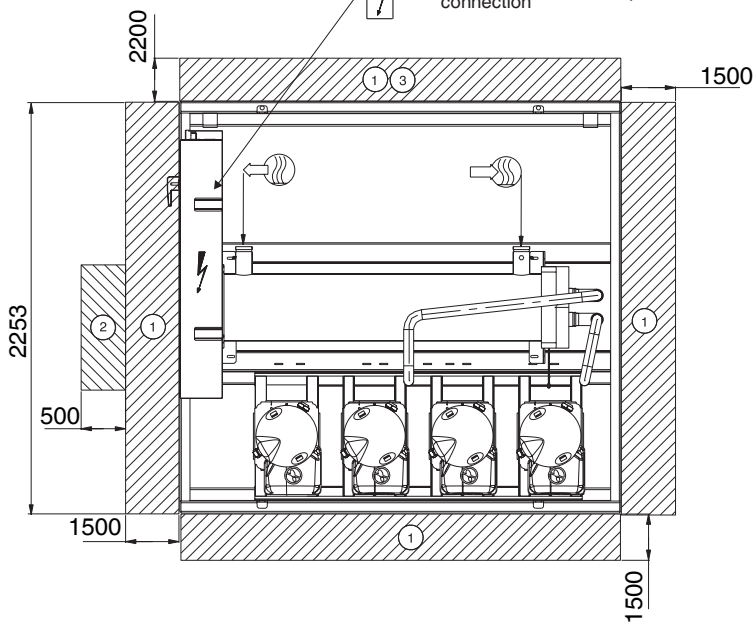

Legend:
All dimensions are in mm.

1. Clearances required for maintenance and air flow
2. Clearances recommended for evaporator tube removal
3. Clearances recommended for heat exchanger removal

Water inlet

Water outlet

Air outlet, do not obstruct

NOTE: Drawings are not contractually binding. Before designing an installation, consult the certified dimensional drawings, available on request.

For the positioning of the fixing points, weight distribution points and centre of gravity coordinates please refer to the dimensional drawings.

Dimensions/clearances

30RB 302-522

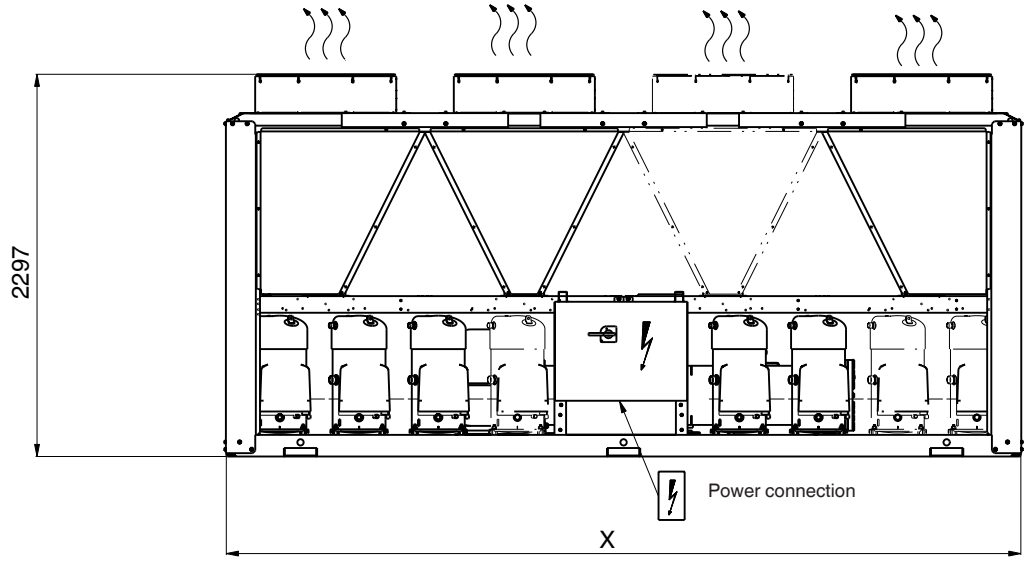

30RB	X	Y
302-402	3604	200
432-522	4798	0

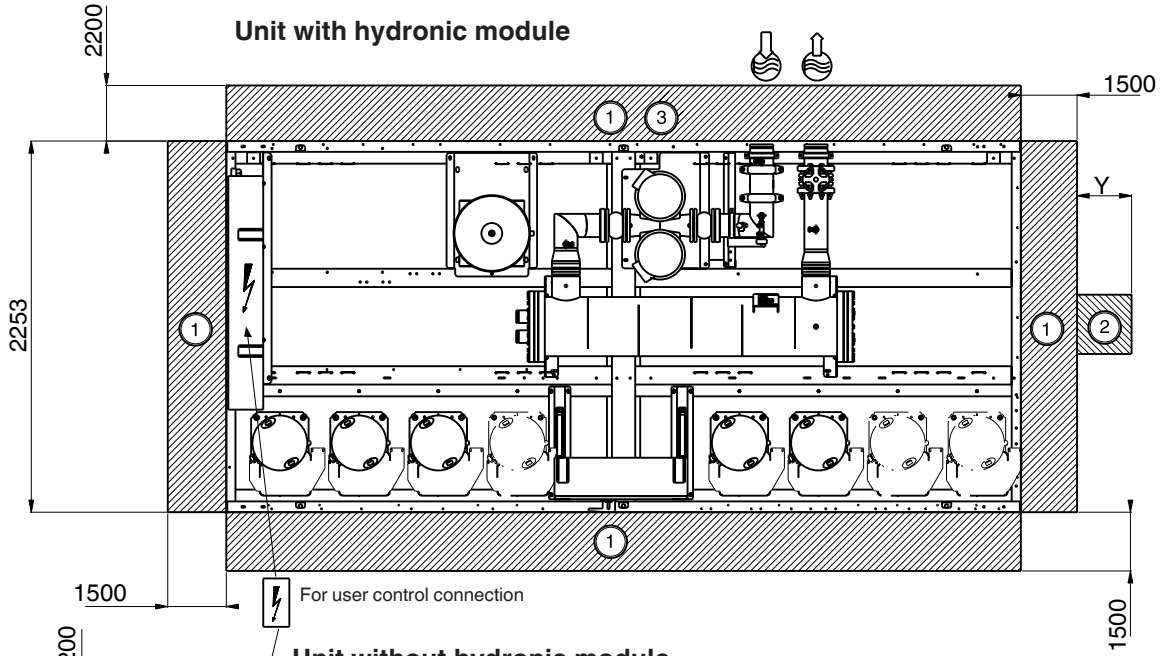

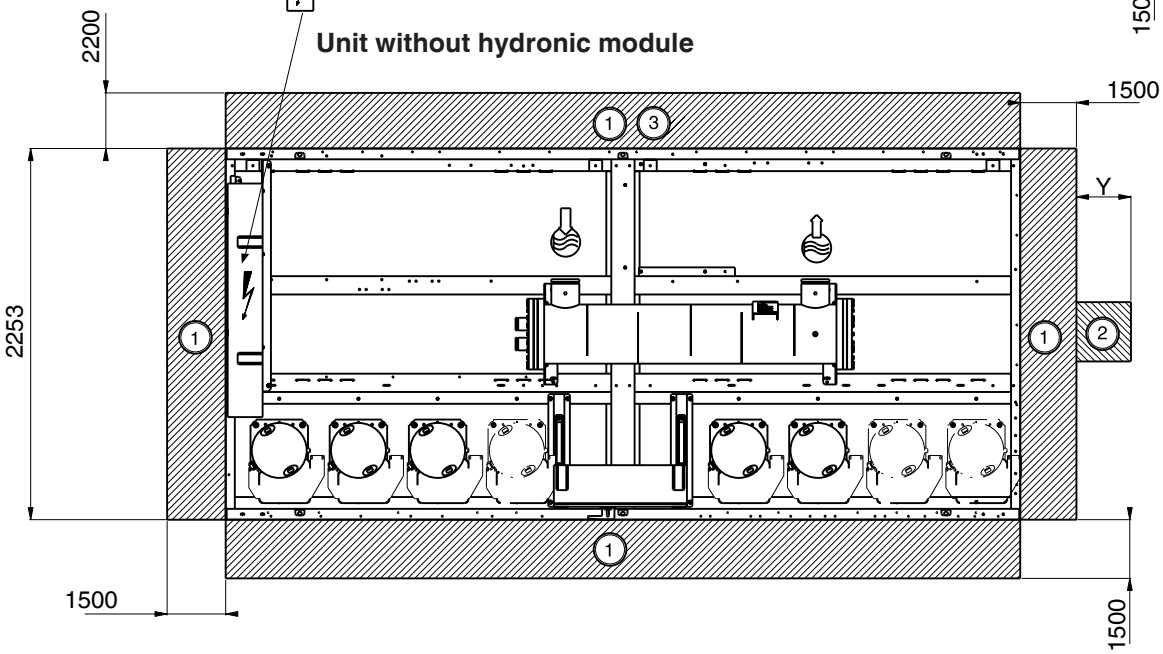

Dimensions/clearances

30RB 602-802

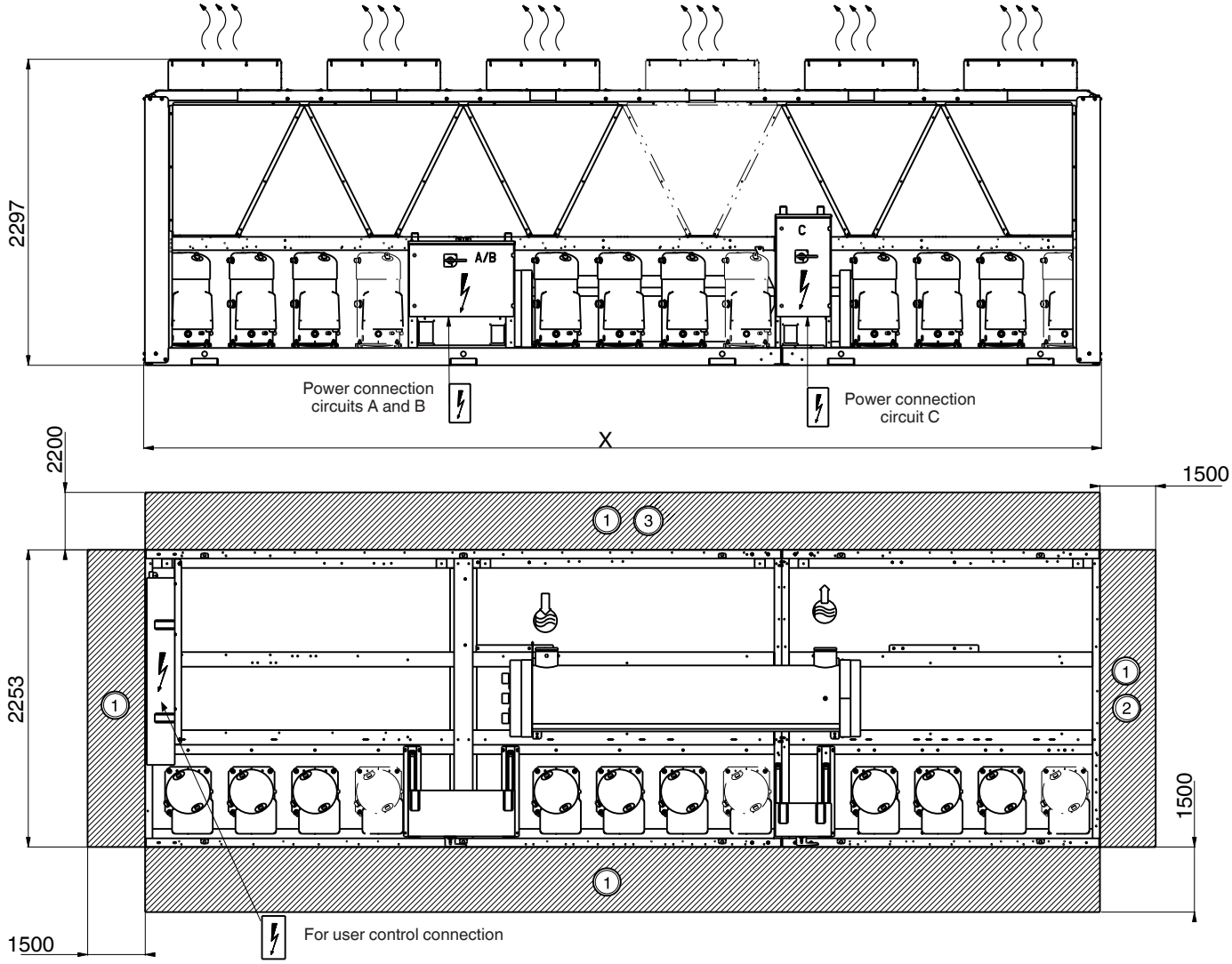

30RB	X
602-672	5992
732-802	7186

Legend:
All dimensions are in mm.

(1) Clearances required for maintenance and air flow

(2) Clearances recommended for evaporator tube removal

(3) Clearances recommended for heat exchanger removal

Water inlet

Water outlet

Air outlet, do not obstruct

NOTE: Drawings are not contractually binding. Before designing an installation, consult the certified dimensional drawings, available on request.

For the positioning of the fixing points, weight distribution points and centre of gravity coordinates please refer to the dimensional drawings.

Cooling capacities

30RB 162-262 "B" standard units (with plate heat exchanger)

30RB 162-262 "B" standard units (with plate heat exhchanger)																										
		Condenser entering air temperature, °C																								
30RB	LWT	25					30					35					40					45				
		CAP	COMP	UNIT	COOL	COOL	CAP	COMP	UNIT	COOL	COOL	CAP	COMP	UNIT	COOL	COOL	CAP	COMP	UNIT	COOL	COOL	CAP	COMP	UNIT	COOL	COOL
	°C	kW	kW	kW	l/s	kPa	kW	kW	kW	l/s	kPa	kW	kW	kW	l/s	kPa	kW	kW	kW	l/s	kPa	kW	kW	kW	l/s	kPa
162	5	172	39.9	44.9	8.19	46.9	163	44.3	49.2	7.78	42.9	154	49.3	54.1	7.31	38.4	143	54.8	59.5	6.79	33.7	131	61.0	65.8	6.24	29.0
182		184	42.9	49.5	8.76	53.9	174	47.5	54.0	8.29	48.8	164	52.7	59.1	7.79	43.7	152	58.4	64.8	7.22	38.3	139	64.8	71.2	6.63	32.9
202		219	52.3	58.8	10.42	61.1	207	57.4	63.9	9.84	55.2	193	62.8	69.2	9.20	49.0	180	68.8	75.1	8.57	43.3	166	75.3	81.6	7.92	37.7
232		233	53.0	59.6	11.12	51.0	222	58.9	65.4	10.57	46.4	209	65.4	71.8	9.96	41.6	194	72.5	78.9	9.24	36.2	177	80.6	86.9	8.43	30.6
262		280	72.9	79.5	13.35	71.1	264	79.7	86.2	12.56	63.9	246	86.9	93.3	11.70	56.5	229	95.1	101.4	10.90	49.9	212	104.2	110.5	10.09	43.7
162	6	177	40.1	45.1	8.44	49.2	168	44.6	49.5	8.02	44.9	158	49.5	54.3	7.55	40.3	147	54.9	59.7	7.01	35.4	135	61.2	65.9	6.44	30.5
182		192	43.2	49.8	9.15	57.7	181	47.8	54.3	8.65	52.2	170	53.0	59.4	8.08	46.3	155	58.6	65.0	7.39	39.6	142	65.0	71.3	6.77	33.9
202		226	52.8	59.4	10.75	64.1	213	58.0	64.5	10.14	57.9	199	63.4	69.9	9.48	51.3	185	69.4	75.8	8.79	44.9	170	75.9	82.2	8.12	39.1
232		240	53.4	59.9	11.44	53.5	229	59.2	65.7	10.90	48.8	216	65.8	72.2	10.28	43.8	200	72.9	79.3	9.55	38.2	184	81.0	87.3	8.77	32.6
262		288	74.0	80.5	13.73	74.2	271	80.8	87.3	12.92	66.7	252	87.9	94.3	12.00	58.6	233	95.9	102.3	11.10	51.2	216	105.0	111.3	10.27	44.7
162	7	182	40.5	45.4	8.68	51.4	173	44.8	49.7	8.26	47.0	163	49.8	54.6	7.77	42.2	151	55.2	60.0	7.23	37.1	139	61.3	66.1	6.63	31.9
182		202	43.6	50.2	9.62	62.7	191	48.3	54.8	9.11	56.9	180	53.5	59.9	8.57	51.0	166	59.2	65.6	7.93	44.5	151	65.5	71.8	7.20	37.6
202		232	53.4	60.0	11.08	67.2	219	58.6	65.1	10.45	60.6	205	64.1	70.5	9.77	53.7	189	70.1	76.4	9.02	46.7	175	76.6	82.9	8.32	40.5
232		246	53.9	60.5	11.74	55.7	235	59.6	66.1	11.20	51.0	222	66.1	72.5	10.59	46.0	206	73.2	79.6	9.85	40.2	190	81.3	87.6	9.04	34.3
262		296	75.0	81.5	14.10	77.2	278	81.9	88.4	13.26	69.3	259	89.0	95.4	12.33	61.0	238	96.8	103.1	11.34	52.7	219	105.8	112.1	10.45	45.8
162	8	187	40.8	45.8	8.92	53.5	178	45.2	50.1	8.49	49.0	168	50.1	54.9	8.01	44.2	156	55.4	60.2	7.44	38.8	143	61.5	66.3	6.83	33.4
182		209	44.3	50.8	9.99	66.6	199	48.7	55.2	9.48	60.7	187	53.9	60.3	8.93	54.5	174	59.6	66.0	8.29	47.8	159	66.0	72.3	7.58	40.9
202		239	54.0	60.6	11.38	70.1	225	59.2	65.7	10.75	63.3	211	64.7	71.1	10.06	56.3	195	70.7	77.1	9.30	48.9	179	77.2	83.5	8.53	42.0
232		252	54.5	61.1	12.01	57.8	240	60.1	66.6	11.47	53.0	228	66.5	72.9	10.87	48.0	213	73.6	80.0	10.14	42.1	195	81.6	88.0	9.31	36.0
262		303	75.9	82.5	14.45	80.1	285	82.9	89.4	13.59	71.9	265	90.1	96.5	12.63	63.3	243	97.8	104.2	11.60	54.5	223	106.6	112.9	10.61	46.7
162	10	197	41.6	46.5	9.39	57.9	187	45.9	50.8	8.92	52.8	176	50.8	55.6	8.42	47.7	165	56.0	60.8	7.86	42.2	151	62.0	66.8	7.22	36.4
182		221	45.4	51.9	10.55	72.5	211	49.8	56.3	10.05	66.5	199	54.9	61.3	9.51	60.2	187	60.3	66.7	8.91	53.7	171	66.7	73.0	8.18	46.2
202		252	55.3	61.8	12.02	76.2	238	60.4	66.9	11.34	68.7	222	65.9	72.3	10.62	61.2	206	72.0	78.4	9.85	53.5	188	78.5	84.8	8.98	45.5
232		263	55.7	62.3	12.53	61.8	251	61.4	67.9	11.97	56.7	238	67.8	74.2	11.36	51.4	223	74.4	80.8	10.67	45.7	206	82.3	88.6	9.86	39.5
262		317	77.9	84.5	15.15	86.0	298	85.0	91.5	14.25	77.1	277	92.2	98.6	13.24	67.8	255	99.9	106.3	12.15	58.4	231	108.3	114.6	11.01	49.2

Legend:

LWT	Leaving water temperature
CAP kW	Cooling capacity
COMP kW	Compressor power input
UNIT kW	Unit power input (compressors, fans and control circuit)
COOL l/s	Evaporator water flow rate
COOL kPa	Evaporator pressure drop

Application data:
Standard units, refrigerant: R-410A
Evaporator temperature rise: 5 K
Evaporator fluid: chilled water
Fouling factor: 0.18 x 10^{-4} (m^2 K)/W

Performances in accordance with EN 14511.

Cooling capacities

30RB 162-262 "B" units with option 280 (shell-and-tube heat exchanger) and 30RB 302-802 units

30RB 162-262 "B" units with option 280 (shell-and-tube heat exchanger) and 30RB 302-802 units

30RB	LWT	Condenser entering air temperature, °C																										
		25					30					35					40					45						
		CAP	COMP	UNIT	COOL	COOL	CAP	COMP	UNIT	COOL	COOL	CAP	COMP	UNIT	COOL	COOL	CAP	COMP	UNIT	COOL	COOL	CAP	COMP	UNIT	COOL	COOL
	°C	kW	kW	kW	l/s	kPa	kW	kW	kW	l/s	kPa	kW	kW	kW	l/s	kPa	kW	kW	kW	l/s	kPa	kW	kW	kW	l/s	kPa
162	5	168	39	44	8	16	160	44	49	8	14	150	49	53	7	13	139	54	59	7	11	127	60	65	6	9
182		180	42	49	9	18	170	47	53	8	16	161	52	58	8	15	150	58	64	7	13	138	64	70	7	11
202		201	51	58	10	22	191	57	63	9	20	180	62	69	9	18	168	69	75	8	16	155	75	82	7	14
232		242	53	60	12	32	230	59	66	11	30	217	66	72	10	27	201	73	79	10	25	184	81	87	9	22
262		278	74	80	13	40	264	81	88	13	37	248	89	95	12	34	231	97	104	11	30	213	107	113	10	27
302		309	78	86	15	46	294	85	94	14	43	276	94	102	13	39	257	104	112	12	35	237	115	123	11	31
342		345	91	99	16	39	327	100	109	16	35	308	110	118	15	32	286	121	129	14	28	264	133	140	13	25
372		376	95	105	18	45	357	105	114	17	41	336	115	125	16	37	312	127	136	15	33	286	139	149	14	28
402		412	111	121	20	52	391	122	132	19	48	368	134	143	18	43	342	147	156	16	38	316	161	171	15	33
432		439	113	124	21	50	418	124	135	20	45	394	136	147	19	41	368	150	161	17	36	339	165	176	16	31
462		468	127	138	22	56	445	140	151	21	51	419	153	164	20	46	391	168	179	19	40	361	184	195	17	35
522		532	144	158	25	71	507	159	172	24	65	477	174	187	23	58	445	191	203	21	51	412	209	222	20	44
602		629	165	180	30	41	597	181	196	28	38	562	199	213	27	34	524	218	232	25	30	484	238	253	23	26
672		687	182	198	33	48	653	200	216	31	44	615	220	235	29	39	573	241	256	27	35	531	264	280	25	30
732		743	200	218	35	56	705	220	238	34	51	664	241	258	32	46	619	264	281	29	40	573	289	306	27	35
802		799	218	237	38	64	759	239	258	36	58	714	262	281	34	52	665	286	305	32	46	615	314	332	29	40
162	6	172	39	44	8	16	163	44	49	8	15	154	49	54	7	13	143	54	59	7	12	131	60	65	6	10
182		186	43	49	9	19	177	47	54	8	17	167	52	59	8	16	155	58	64	7	14	143	64	71	7	12
202		208	52	59	10	23	197	57	64	9	21	186	63	69	9	19	174	69	76	8	17	160	76	82	8	15
232		248	54	60	12	33	235	60	66	11	31	222	66	72	11	28	207	73	79	10	25	190	81	87	9	23
262		287	75	81	14	41	272	82	89	13	38	256	90	96	12	35	238	99	105	11	32	220	108	114	10	28
302		318	79	87	15	47	302	87	95	14	44	285	95	103	14	41	265	105	113	13	37	245	116	124	12	33
342		356	93	101	17	40	338	102	110	16	37	318	112	120	15	33	296	122	130	14	30	273	134	142	13	26
372		389	96	106	19	47	369	106	116	18	43	347	117	126	17	39	322	128	138	15	34	297	141	150	14	30
402		425	112	122	20	55	403	123	133	19	50	379	135	145	18	45	353	149	158	17	40	327	163	173	16	35
432		449	114	125	21	52	429	125	136	20	47	405	138	149	19	43	379	151	163	18	38	351	167	178	17	33
462		484	129	140	23	59	460	142	153	22	54	434	155	167	21	48	404	170	181	19	43	374	186	197	18	37
522		549	147	160	26	75	523	161	174	25	68	493	177	189	23	61	461	193	206	22	54	427	212	225	20	47
602		649	167	182	31	44	616	184	198	29	40	579	201	216	28	35	540	220	234	26	31	499	241	255	24	27
672		707	184	201	34	51	672	203	219	32	46	633	222	238	30	41	591	243	259	28	36	547	267	283	26	32
732		766	203	221	36	59	727	223	241	35	53	684	244	262	33	48	638	267	285	30	42	590	293	310	28	37
802		823	221	241	39	67	782	243	262	37	61	736	265	284	35	55	686	290	309	33	48	635	318	336	30	42
162	7	178	39	44	8	17	168	44	49	8	16	159	49	54	8	14	147	54	59	7	12	135	61	65	6	10
182		194	43	50	9	20	184	48	54	9	19	173	53	59	8	17	161	59	65	8	15	148	65	71	7	13
202		216	53	59	10	25	205	58	64	10	23	193	64	70	9	20	180	70	76	9	18	166	77	83	8	15
232		253	54	61	12	34	241	60	67	11	31	227	66	73	11	29	212	73	80	10	26	195	81	88	9	23
262		295	76	82	14	42	280	83	90	13	39	263	91	98	13	36	245	100	106	12	33	227	109	116	11	29
302		328	80	88	16	49	311	88	96	15	46	293	96	104	14	42	274	106	114	13	38	252	117	125	12	34
342		367	94	102	17	42	348	103	111	17	39	328	113	121	16	35	305	124	132	15	31	282	136	143	13	27
372		402	97	107	19	49	381	107	117	18	45	359	118	128	17	41	333	130	139	16	36	307	142	152	15	31
402		438	114	123	21	57	416	125	135	20	52	391	137	147	19	47	364	150	160	17	42	337	165	174	16	37
432		463	115	126	22	54	442	127	138	21	50	418	139	151	20	45	391	153	164	19	40	362	168	179	17	34
462		499	131	142	24	62	475	144	155	23	57	447	157	169	21	51	417	172	183	20	45	386	189	200	18	39
522		564	149	162	27	78	537	163	176	26	72	506	179	191	24	64	473	196	208	23	57	439	215	227	21	49
602		670	170	185	32	46	635	187	201	30	42	596	204	218	28	37	556	223	237	26	33	514	244	258	25	28
672		728	187	203	35	53	692	205	221	33	49	652	225	241	31	43	608	246	262	29	38	564	270	286	27	33
732		790	207	224	38	62	749	227	244	36	56	704	248	265	34	50	657	271	288	31	44	608	296	314	29	38
802		850	224	244	41	71	806	246	266	38	64	758	269	288	36	57	707	294	313	34	51	654	322	341	31	44

Cooling capacities

30RB 162-262 "B" units with option 280 (shell-and-tube heat exchanger) and 30RB 302-802 units (continued)

30RB 162-262 "B" units with option 280 (shell-and-tube heat exchanger) and 30RB 302-802 units

		Condenser entering air temperature, °C																									
30RB	LWT	25					30					35					40					45					
		CAP	COMP	UNIT	COOL	COOL	CAP	COMP	UNIT	COOL	COOL	CAP	COMP	UNIT	COOL	COOL	CAP	COMP	UNIT	COOL	COOL	CAP	COMP	UNIT	COOL	COOL
	°C	kW	kW	kW	l/s	kPa	kW	kW	kW	l/s	kPa	kW	kW	kW	l/s	kPa	kW	kW	kW	l/s	kPa	kW	kW	kW	l/s	kPa
162	8	183	40	45	9	18	174	44	49	8	16	163	49	54	8	15	152	55	59	7	13	139	61	65	7	11
182		201	44	50	10	22	191	48	55	9	20	180	53	60	9	18	168	59	65	8	16	154	65	71	7	13
202		224	54	60	11	27	212	59	65	10	24	200	65	71	10	22	186	71	77	9	19	172	78	84	8	16
232		258	55	61	12	35	246	61	67	12	32	232	67	73	11	30	217	74	80	10	27	200	82	88	10	24
262		304	77	84	14	44	288	85	91	14	41	271	92	99	13	37	253	101	107	12	34	234	111	117	11	30
302		339	81	89	16	51	322	89	97	15	48	303	98	106	14	44	282	107	115	13	40	261	118	126	12	35
342		379	96	104	18	44	359	105	113	17	41	338	115	123	16	37	315	125	133	15	32	291	137	145	14	28
372		415	99	108	20	52	394	109	118	19	47	370	119	129	18	43	344	131	140	16	38	317	144	153	15	33
402		452	115	125	22	60	429	127	136	20	55	403	139	148	19	49	375	152	161	18	44	348	167	176	17	39
432		477	116	128	23	57	455	128	140	22	52	430	141	152	21	47	402	155	166	19	42	373	170	181	18	36
462		515	133	144	25	66	489	146	157	23	60	460	160	171	22	53	429	174	186	20	47	398	191	202	19	41
522		581	151	164	28	82	552	165	178	26	75	520	181	194	25	67	486	198	211	23	59	451	217	229	22	52
602		691	173	187	33	48	655	189	204	31	44	615	207	221	29	39	572	226	240	27	34	530	247	261	25	30
672		749	189	206	36	56	712	208	224	34	51	671	228	243	32	46	626	249	265	30	40	581	273	289	28	35
732		816	210	228	39	65	773	230	248	37	59	726	251	269	35	53	676	274	292	32	46	626	300	317	30	40
802		878	228	247	42	75	832	250	269	40	68	780	273	292	37	60	728	298	317	35	53	674	326	345	32	46
162	10	193	40	45	9	20	184	45	49	9	18	173	49	54	8	16	161	55	60	8	14	147	61	66	7	12
182		217	45	52	10	25	206	50	56	10	22	194	55	61	9	20	181	60	67	9	18	166	66	72	8	15
202		239	55	62	11	30	227	60	67	11	27	214	66	73	10	24	199	72	79	10	21	184	79	86	9	18
232		272	56	63	13	37	259	62	68	12	34	244	68	75	12	32	228	75	81	11	29	210	83	89	10	25
262		321	79	86	15	47	305	87	93	15	44	286	95	101	14	40	267	104	110	13	36	248	113	120	12	33
302		361	83	91	17	55	343	92	100	16	52	323	101	109	15	47	301	110	118	14	43	278	121	129	13	38
342		403	99	107	19	49	382	109	117	18	45	359	118	126	17	40	334	129	137	16	36	309	141	149	15	31
372		444	102	111	21	57	421	112	121	20	52	395	122	132	19	47	367	134	144	18	42	338	147	156	16	36
402		479	119	129	23	65	455	131	140	22	60	428	142	152	20	54	398	155	165	19	48	369	170	180	18	42
432		506	120	131	24	63	482	132	143	23	58	456	145	156	22	52	426	159	170	20	46	396	174	185	19	40
462		548	137	149	26	73	521	151	162	25	67	489	164	175	23	59	455	179	190	22	52	422	196	207	20	45
522		617	155	168	29	91	587	170	183	28	83	552	186	199	26	74	513	203	215	25	65	476	222	234	23	56
602		734	179	193	35	53	696	196	210	33	48	653	213	227	31	43	608	232	246	29	38	561	253	267	27	33
672		791	195	211	38	61	753	214	230	36	56	709	233	249	34	50	662	255	271	32	44	614	279	295	29	38
732		869	216	234	41	73	824	237	255	39	66	773	258	276	37	59	718	282	299	34	51	664	308	325	32	44
802		935	235	254	45	83	887	257	277	42	75	832	281	300	40	67	773	306	325	37	59	715	335	354	34	51

Legend:

LWT	Leaving water temperature
CAP kW	Cooling capacity
COMP kW	Compressor power input
UNIT kW	Unit power input (compressors, fans and control circuit)
COOL l/s	Evaporator water flow rate
COOL kPa	Evaporator pressure drop

Application data:
Standard units, refrigerant: R-410A
Evaporator temperature rise: 5 K
Evaporator fluid: chilled water
Fouling factor: 0.18×10^{-4} (m^2 K)/W

Performances in accordance with EN 14511.

Hydronic module (option 116)

The hydronic module option saves a lot of installation time. The chiller is factory-equipped with the main components for the hydronic system: screen filter, water pump, expansion tank, safety valve and water flow control valve.

Several water pump types are available to suit any application: primary single or dual low-pressure pump or single or dual high-pressure pump (30RB 162-522).

An automatic pump start-up algorithm protects the heat exchanger and the hydronic module piping against frost down to -10°C outside temperature, if the evaporator frost protection option is installed. If necessary increased frost protection down to -20°C is possible by adding the heater option to the hydronic module piping (see options 41 and 42A).

The hydronic module option is integrated into the chiller without increasing its dimensions and saves the space normally used for the water pump.

Hydronic module

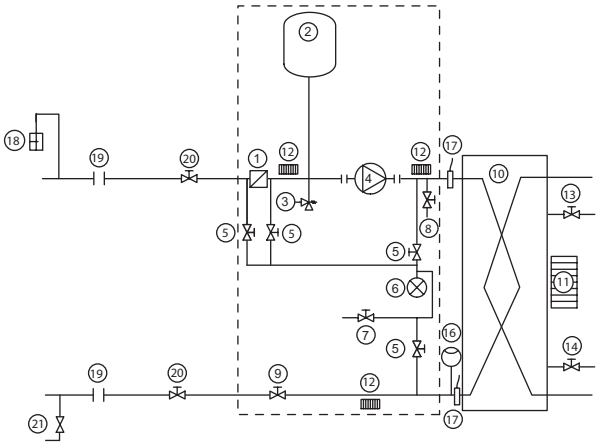

Typical hydronic circuit diagram

Legend

Components of unit and hydronic module
1 Victaulic screen filter
2 Expansion tank
3 Safety valve
4 Available pressure pump
5 Pressure tap valve (see Installation Manual)
6 Pressure gauge to measure the component pressure loss (see Installation Manual)
7 System vent valve, pressure gauge
8 Drain valve
9 Water flow control valve
10 Heat exchanger
11 Evaporator heater (option)
12 Hydronic module heater (option)
13 Air vent (evaporator)
14 Water purge (evaporator)
16 Flow switch
17 Water temperature sensor

System components
18 Air vent
19 Flexible connection
20 Shut-down valves
21 Charge valve

--- Hydronic module (units with hydronic module)

Notes:
With option 42A the unit hydronic module is protected against frost by electric heaters. The unit evaporator must be protected against frost (anti-freeze solution or optional electric heater)

Physical and electrical data for units with hydronic module

30RB 162-262 “B” standard units (with plate heat exchanger)

30RB		162	182	202	232	262
Operating weight*						
Unit with option 15 and dual-pump hydronic module	kg	1280	1358	1455	1471	1655
Hydronic module						
Expansion tank volume	l	50	50	50	50	50
Maximum operating pressure	kPa	400	400	400	400	400
Water filter		Screen filter (Victaulic)				
Low-pressure pump						
Water pump		Single or dual monocell centrifugal pump				
Pump capacity	kW	2.2	2.2	2.2	2.2	3
Pump power input	kW	2.7	2.7	2.7	2.7	3.6
Maximum pump current drawn	A	4.7	4.7	4.7	4.7	6.4
High-pressure pump						
Water pump		Single or dual monocell centrifugal pump				
Pump capacity	kW	4	4	4	4	4
Pump power input	kW	4.7	4.7	4.7	4.7	4.7
Maximum pump current drawn	A	8.2	8.2	8.2	8.2	8.2
Water connections (with hydronic module)		Victaulic type				
Diameter	in	3	3	3	3	3
Outside pipe diameter	mm	88.9	88.9	88.9	88.9	88.9

30RB 162-262 “B” units with option 280 (shell-and-tube heat exchanger) and 30RB 302-802 units

30RB		162	182	202	232	262	302	342	372	402	432	462	522
Operating weight*													
Unit with option 15 and dual-pump hydronic module	kg	1960	2040	2130	2160	2330	3070	3266	3254	3480	4010	4200	4400
Hydronic module													
Expansion tank volume	l	50	50	50	50	50	80	80	80	80	80	80	80
Maximum operating pressure	kPa	400	400	400	400	400	400	400	400	400	400	400	400
Water filter		Screen filter (Victaulic)											
Low-pressure pump													
Water pump		Single or dual monocell centrifugal pump											
Pump capacity	kW	2.2	2.2	2.2	2.2	2.2	3	3	4	4	4	5.5	5.5
Pump power input	kW	2.7	2.7	2.7	2.7	2.7	3.6	3.6	4.6	4.6	4.6	6.3	6.3
Maximum pump current drawn	A	4.7	4.7	4.7	4.7	4.7	6.4	6.4	8.2	8.2	8.2	11.2	11.2
High-pressure pump													
Water pump		Single or dual monocell centrifugal pump											
Pump capacity	kW	4	4	4	4	4	5.5	5.5	7.5	7.5	7.5	11	11
Pump power input	kW	4.7	4.7	4.7	4.7	4.7	6.4	6.4	8.5	8.5	8.5	12.2	12.2
Maximum pump current drawn	A	8.2	8.2	8.2	8.2	8.2	11.2	11.2	15.4	15.4	15.4	21.2	21.2
Water connections (with hydronic module)		Victaulic type											
Diameter	in	3	3	3	3	3	4	4	4	4	5	5	5
Outside pipe diameter	mm	88.9	88.9	88.9	88.9	88.9	114.3	114.3	114.3	114.3	139.7	139.7	139.7

* Weights are for guidance only

Available static system pressure

30RB 162-262 “B” standard units (with plate heat exchanger)

Low-pressure pump (hydronic module option)

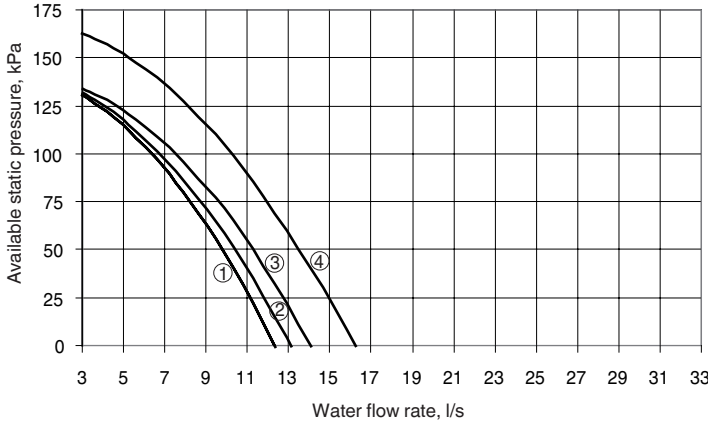

Legend
1 30RB 162-182 "B"
2 30RB 202 "B"
3 30RB 232 "B"
4 30RB 262 "B"

High-pressure pump (hydronic module option)

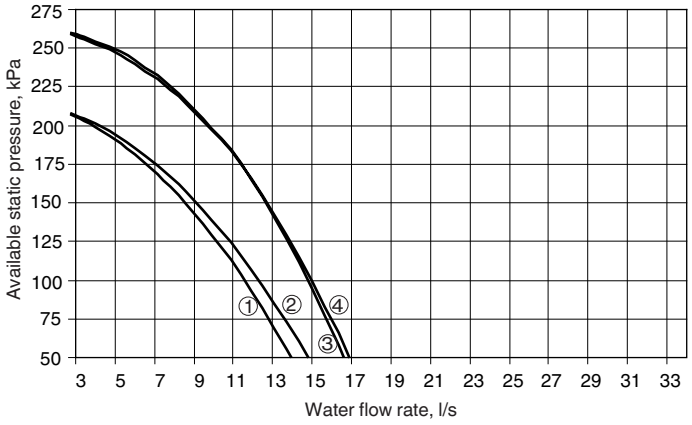

Legend
1 30RB 162-182 "B"
2 30RB 202 "B"
3 30RB 232 "B"
4 30RB 262 "B"

30RB 162-262 “B” units with option 280 (shell-and-tube heat exchanger) and 30RB 302-522 units

Low-pressure pump (hydronic module option)

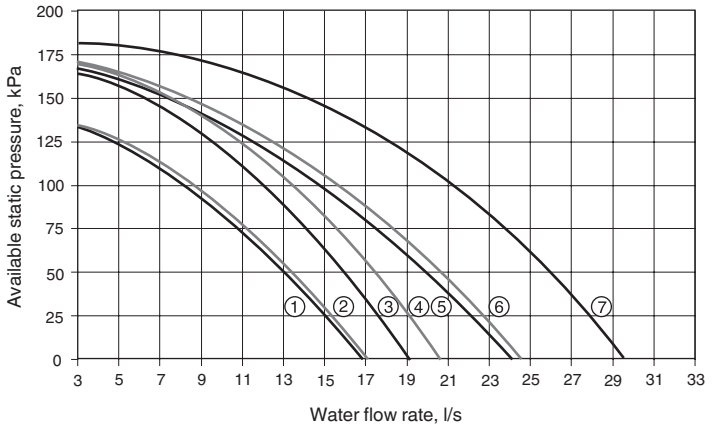

Legend
1 30RB 232-262 "B"
2 30RB 162-202 "B"
3 30RB 302
4 30RB 342
5 30RB 372-402
6 30RB 432
7 30RB 462-522

High-pressure pump (hydronic module option)

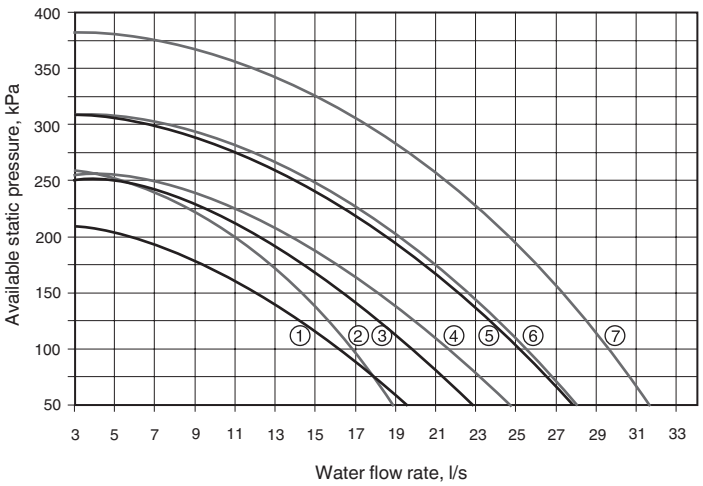

Legend
1 30RB 162-202 "B"
2 30RB 202-232 "B"
3 30RB 302
4 30RB 342
5 30RB 372-402
6 30RB 432
7 30RB 462-522

Partial heat reclaim using desuperheaters (option 49)

This option permits the production of free hot water using heat reclaim by desuperheating the compressor discharge gases. The option is available for the whole 30RB range.

A plate heat exchanger is installed in series with the air condenser coils on the compressor discharge line of each circuit.

Physical data, 30RB units with partial heat reclaim

30RB - partial heat reclaim mode		162	182	202	232	262	302	342	372	402	432	462	522	602	672	732	802
Cooling capacity*	kW	159	173	193	227	263	293	328	359	391	418	447	506	596	652	704	758
Heating capacity*	kW	39	42	58	56	87	99	106	110	124	122	146	155	191	203	235	236
Unit power input*	kW	54	59	70	73	98	105	121	128	147	151	169	191	218	241	265	288
Energy efficiency ratio*	kW/kW	2.95	2.92	2.75	3.12	2.70	2.81	2.71	2.81	2.67	2.77	2.65	2.65	2.73	2.71	2.66	2.63
Operating weight**																	
Standard unit***	kg	1882	1974	2074	2092	2260	2853	3049	3092	3218	3755	3895	4063	5285	5484	6145	6315
Unit with options****	kg	2052	2154	2244	2282	2450	3083	3279	3342	3478	4045	4185	4373	5645	5833	6555	6745
Unit with options†	kg	2302	2404	2484	2522	2690	3393	3589	3692	3818	4395	4585	4795	-	-	-	-
Desuperheater in circuits A/B/C		Plate heat exchanger															
Water volume circuit A	l	1.75	1.75	1.75	3.75	3.75	5.5	5.5	5.5	5.5	7.5	7.5	7.5	5.5	5.5	7.5	7.5
Water volume circuit B	l	3.5	3.5	3.5	3.75	3.75	3.75	3.75	5.5	5.5	5.5	5.5	7.5	5.5	5.5	7.5	7.5
Water volume circuit C	l	-	-	-	-	-	-	-	-	-	-	-	-	5.5	5.7	5.5	7.5
Max. water-side operating pressure	kPa	1000	1000	1000	1000	1000	1000	1000	1000	1000	1000	1000	1000	1000	1000	1000	1000
Water connections		Cylindrical male gas thread															
Connection	in	2	2	2	2	2	2	2	2	2	2	2	2	2	2	2	2
Outside diameter	mm	60.3	60.3	60.3	60.3	60.3	60.3	60.3	60.3	60.3	60.3	60.3	60.3	60.3	60.3	60.3	60.3

* Nominal conditions: Evaporator entering and leaving water temperature = 12°C/7°C, desuperheater entering and leaving water temperature = 50°C/60°C, outside air temperature = 35°C.
** Weights shown are a guideline only
*** Standard unit (with MCHX coils) and desuperheater option + option 280 (shell-and-tube heat exchanger)
**** Unit with option 15 (desuperheater)
† Unit with option 15 and desuperheater and hydronic module with high-pressure dual pump

Total heat reclaim (option 50)

Suitable for heating, domestic hot water preparation, agriculture and food industry, industrial processes and other hot-water requirements.

With the total heat reclaim option it is possible to reduce the energy consumption bill considerably compared to conventional heating equipment such as fossil fuel boilers or electric water tanks.

Operating principle

If hot water production is required, the compressor discharge gases are directed towards the heat reclaim condenser. The refrigerant releases its heat to the hot water that leaves the condenser at a temperature of up to 55°C. In this way 100% of the heat rejected by the liquid chiller can be used to produce hot water. When the demand for heat is satisfied, the hot gas is again directed towards the air condenser where the heat is rejected to the outside air by the fans. Hot water temperature control is ensured by the chiller Pro-Dialog control that independently controls the reclaim operation of each refrigerant circuit.

Physical data, 30RB units with total heat reclaim

30RB – total heat reclaim mode		262	302	342	372	402	432	462	522
Cooling capacity*	kW	242	263	311	335	361	388	421	467
Heating capacity in heat reclaim mode*	kW	328	358	422	453	496	531	578	653
Total power input (unit)*	kW	91	100	117	125	142	150	166	195
Total energy efficiency ratio (EER/COP)	kW/kW	2.65/3.60	2.64/3.59	2.66/3.61	2.68/3.63	2.54/3.49	2.58/3.53	2.54/3.49	2.39/3.34
Operating weight**									
Standard unit	kg	2610	3200	3420	3480	3610	4290	4430	4620
Unit with option 15	kg	2800	3440	3660	3470	3870	4590	4730	4930
Refrigerant charge									
Circuit A	kg	27	40	41	41.5	42	50	51.5	51.5
Circuit B	kg	27	29	29	41.5	42	46	46	51.5
Heat reclaim condenser		Twin-circuit shell-and-tube condenser with finned copper tubes							
Water volume	l	22	22	22	22	22	46	46	46
Water connections		Victaulic							
Diameter	in	3	3	3	3	3	4	4	4
Outside diameter	mm	88.9	88.9	88.9	88.9	88.9	114.3	114.3	114.3

* Entering and leaving water temperature: evaporator 12°C/7°C; heat reclaim condenser: 40°C/45°C
** Weights are for guidance only

DX free-cooling system (option 118A)

The DX free-cooling option permits significant energy savings for all applications that require cooling in winter. In the free-cooling mode the compressors are stopped and only the fan and cooling micro-pump are running. The changeover from compressor cooling mode to free-cooling mode is automatically controlled by the Pro-Dialog control, based on the chiller heat load and the temperature difference between chilled water and ambient air.
Important: In order to optimise chiller performances, it is recommended to use the leaving water set point reset function.

Operating principle

When the chilled water-air temperature difference exceeds a threshold value, the Pro-Dialog control carries out a comparison between the instantaneous chiller cooling capacity and the available free-cooling capacity. If the operating conditions allow free-cooling operation, the compressors are stopped, a three-way valve on the suction piping connects the evaporator with the condenser, allowing the migration of the refrigerant vapours to the condenser. The refrigerant condenses in the condenser coils, and the cooling micro-pump transports the liquid to the evaporator. The cooling capacity in free-cooling mode is controlled by the opening of the electronic expansion valve (EXV).

Advantages of the DX free-cooling system

- Operation without glycol
  - Unlike traditional hydronic free-cooling systems that require the use of a glycol solution, the Aquasnap DX free-cooling chiller works with pure water. The evaporator is protected against frost down to -20°C by an electric resistance heater (option).
- Low water pressure losses
  - The Aquasnap DX free-cooling chiller does not include a three-way valve nor free-cooling coils connected in series with the evaporator. The Aquasnap free-cooling chiller has the same water pressure losses as a standard chiller.
- Weight and dimensions gain
  - The DX free-cooling option has little impact on the weight of the liquid chiller.
  - The Aquasnap free-cooling chiller has the same dimensions as a standard chiller.
- Increased energy efficiency
  - In free-cooling mode only the fans and the cooling micro-pump run. At an air-water temperature difference of 10 K for example the average chiller energy efficiency (EER) is 15 (kW/kW).
  - In the mechanical cooling mode chiller thermal and energy performances are not reduced by the use of a water-glycol solution.
  - As the pressure losses of the water circuit are low, the water pumps use less energy.

Physical data, 30RB units free-cooling system

30RB (compressor cooling mode)		232	262	302	342	372	402	432	462	522
Nominal cooling capacity*	kW	220	249	283	320	354	377	413	437	488
Unit power input*	kW	76	101	108	125	132	151	156	175	198
Operating weight**										
Unit with option 15	kg	2398	2580	3229	3429	3518	3658	4241	4381	4591
Standard unit	kg	2208	2390	2999	3199	3268	3398	3951	4091	4281
Refrigerant charge		R-410A								
Circuit A	kg	29	29	42.5	44	45.5	46	55	57	57
Circuit B	kg	29	29	31	31	45.5	46	47	47	57

* Nominal conditions: evaporator leaving water temperature 12°C/7°C, outside air temperature 35°C.
** Weights are for guidance only

Cooling capacities

30RB 232-522 (free-cooling mode)

		Condenser entering air temperature, °C								
		0			-5			-10		
30RB	LWT °C	Cap kW	Unit kW	EER kW/kW	Cap kW	Unit kW	EER kW/kW	Cap kW	Unit kW	EER kW/kW
232	10	117	8	14.6	121	8	15.1	121	4	30.2
262		117	8	14.6	121	8	15.1	121	4	30.2
302		145	10	14.5	162	10	16.2	186	8	23.2
342		145	10	14.5	162	10	16.2	186	8	23.2
372		173	11	15.7	203	12	16.9	250	12	20.8
402		173	11	15.7	203	12	16.9	250	12	20.8
432		211	13	16.2	246	13	18.9	277	13	21.3
462		211	13	16.2	246	13	18.9	277	13	21.3
522		248	15	16.5	275	15	18.3	293	15	19.5

LWT - Leaving water temperature
Cap kW - Cooling capacity
Unit kW - Unit power input (compressors, fans, control)
EER kW/kW - Energy efficiency

Operating limits

30RB - compressor cooling mode

Evaporator water temperature	°C	Minimum	Maximum
Entering water at start-up		6.8	40
Entering water during operation		8.5	25
Leaving water during operation		5	15
Condenser air temperature	**°C**	**Minimum**	**Maximum**
Standard free-cooling unit		0	48
With winter operation option (No. 28)		-20	48

30RB - free-cooling mode

Evaporator water temperature	°C	Minimum	Maximum
Entering water at start-up		6.8	40
Leaving water during operation		5	26
Condenser air temperature	**°C**	**Minimum**	**Maximum**
		-25	20

Units with fans with available pressure for indoor installation (option 12)

This option applies to 30RB units installed inside the building in a plant room. For this type of installation the hot air leaving the air-cooled condensers is discharged by the fans to the outside of the building, using a duct system.

30RB units equipped with fans with available pressure are designed to operate with air discharge ducts with maximum pressure drops of 200 Pa.

To compensate for these pressure drops 30RB units with option 12 are equipped with variable-speed fans with a maximum speed of 19 r/s, instead of 15.8 r/s and fixed-speed fans as for the standard units.

All fans in the same refrigerant circuit are controlled by a single-speed variator and therefore all run at the same speed.

The full-load or part-load speed is controlled by a patented algorithm that permanently optimises the condensing temperature to ensure the best unit energy efficiency (EER) whatever the operating conditions and pressure drops of the system ductwork.

Each refrigerant circuit (A, B and C) must have a separate ducting system to prevent any air recycling between the condensers of the different refrigerant circuits.

In 30RB units with option 12 each fan is equipped with a factory-installed connection interface, allowing the connection to the ducting system for the specific circuit (A, B and C) for each fan. Please refer to the unit dimensional drawings for the exact dimensions of the connection interface.

The unit cooling capacity and energy efficiency ratio (EER) vary depending on the duct pressure drops:
- between 0 and 100 Pa the unit cooling capacity is only slightly affected,
- between 100 and 200 Pa the unit cooling capacity falls considerably depending on the operating conditions (outdoor air temperature and water conditions).

Please refer to the curves below to evaluate the impact of the estimated duct system pressure drop for the installation and the impact of different full load operating conditions on the 30RB unit cooling capacity and EER.

Cooling capacity variations for operating conditions that differ from Eurovent conditions

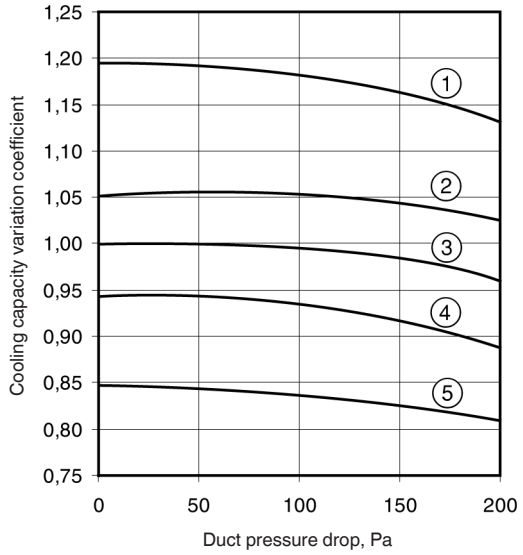

EER variations for operating conditions that differ from Eurovent conditions

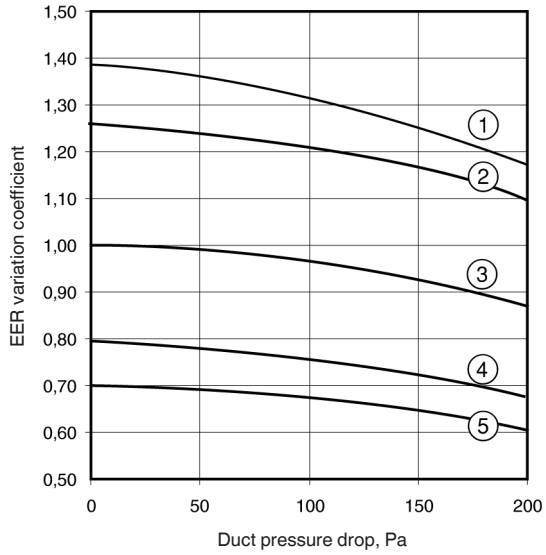

Operating conditions

Curve No.	Outside temperature, °C	Entering water temperature, °C	Leaving water temperature, °C	Load %
1	25	15	10	100
2	25	10	5	100
3 Eurovent	**35**	**12**	**7**	**100**
4	45	15	10	100
5	45	10	5	100

Nominal and maximum air flows per circuit

30RB	Nominal/maximum air flow, l/s		
	Circuit A	Circuit B	Circuit C
162-262	9030/11110	9030/11110	-
302-342	13540/16670	9030/11110	-
372-402	13540/16670	13540/16670	-
432-462	18060/22220	13540/16670	-
522	18060/22220	18060/22220	-
602	13540/16670	13540/16670	13540/16670
672	13540/16670	13540/16670	18060/22220
732	18060/22220	18060/22220	13540/16670
802	18060/22220	18060/22220	18060/22220

Sound power level at the discharge duct outlet for all circuits

30RB		162	182	202	232	262	302	342	372	402	432	462	522	602	672	732	802
Sound power level 10^{-12} W	dB(A)	93	93	93	93	93	94	94	95	95	95.5	95.5	96	96.5	97	97.5	98

Electrical data notes for 30RB units:

- 30RB 162-522 units have a single power connection point at the main disconnect switch; 30RB 602-802 units have two connection points at the main disconnect switch.
- The control box includes the following standard features:
  - Starter and motor protection devices for each compressor and the fan(s)
  - Control devices
- **Field connections:**
  All connections to the system and the electrical installations must be in full accordance with all applicable local codes.
- The Carrier 30RB units are designed and built to ensure conformance with these codes. The recommendations of European standard EN 60 204-1 (corresponds to IEC 60204-1) (machine safety - electrical machine components - part 1: general regulations) are specifically taken into account, when designing the electrical equipment.
- **Electrical reserves:**
  Circuit A has disconnect switches and branch sections, designed to supply the evaporator pump power input.

IMPORTANT:

- Generally the recommendations of IEC 60364 are accepted as compliance with the requirements of the installation directives. Conformance with EN 60204 is the best means of ensuring compliance with the Machines Directive § 1.5.1.
- Annex B of EN 60204-1 describes the electrical characteristics used for the operation of the machines.

1. The operating environment for the 30RB units is specified below:
   a. Environment* - Environment as classified in EN 60721 (corresponds to IEC 60721):
      - outdoor installation*
      - ambient temperature range: -20°C to +48°C ± 1 K, class 4K3*
      - altitude: ≤ 2000 m
      - presence of hard solids, class 4S2 (no significant dust present)
      - presence of corrosive and polluting substances, class 4C2 (negligible)
      - vibration and shock, class 4M2
   b. Competence of personnel, class BA4* (trained personnel - IEC 60364)
2. Power supply frequency variation: ± 2 Hz.
3. The neutral (N) line must not be connected directly to the unit (if necessary use a transformer).
4. Overcurrent protection of the power supply conductors is not provided with the unit.
5. The factory-installed disconnect switch(es)/circuit breaker(s) is (are) of a type suitable for power interruption in accordance with EN 60947-3 (corresponds to IEC 60947-3).
6, The units are designed for simplified connection on TN(s) networks (IEC 60364). For IT networks derived currents may interfere with network monitoring elements, and it is recommended to create an IT type divider for the system units that require this and/or a TN type divider for Carrier units. Please consult the appropriate local organisations to define the monitoring and protection elements and carry out the electrical installation.

   If short circuit currents above those given in the electrical data table are likely, modifications are required. Please contact your local Carrier representative.

   NOTE: If particular aspects of an actual installation do not conform to the conditions described above, or if there are other conditions which should be considered, always contact your local Carrier representative.

* The required protection level for this class is IP43BW (according to reference document IEC 60529). All 30RB units are protected to IP44CW and fulfil this protection condition.

EUROVENT CERTIFIED PERFORMANCE

LLOYD'S REGISTER QUALITY ASSURANCE ISO 14001

UKAS ENVIRONMENTAL MANAGEMENT 001

Environmental Management System Approval

Carrier

Order No.13438-20, 07.2009. Supersedes order No. 13438-20, 12.2008
Manufacturer reserves the right to change any product specifications without notice.

Manufactured by: Carrier SCS, Montluel, France.
Printed in the Netherlands.